New 500mm x 500mm x 200mm in custom folder Aluminium light box projection sign as shown with company logo. Sign colour in:-

Background - RAL 7016
Opal Acrylic inserts - Rad Pantone 485C

Internally lit LED sign:-

12v
45000hours
2.88w per module
240 Lumens per Module
6500K · IP67
The illuminated light will be on a timer. It will turn on at 6am and turn off at 11pm

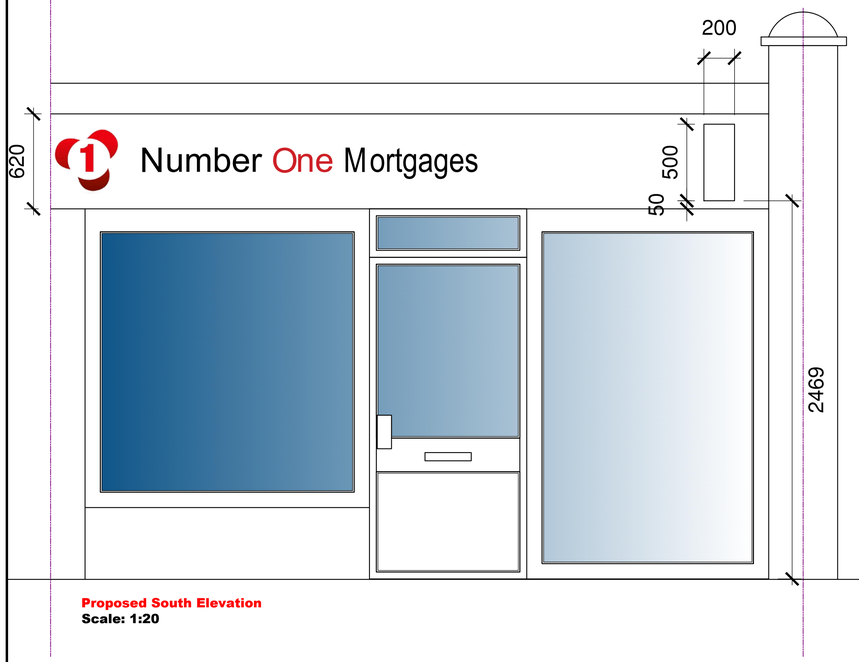

Proposed South Elevation
Scale: 1:20

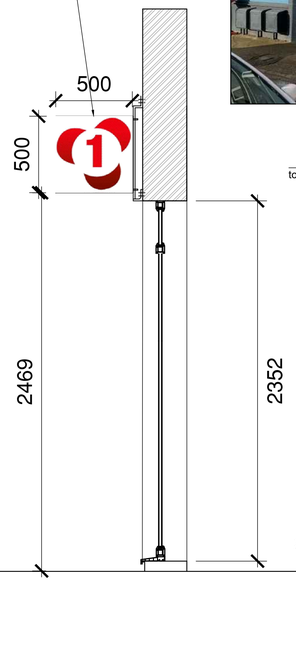







Existing Shop front

Back to Back plate to support x2 LED bulbs on each side of the display

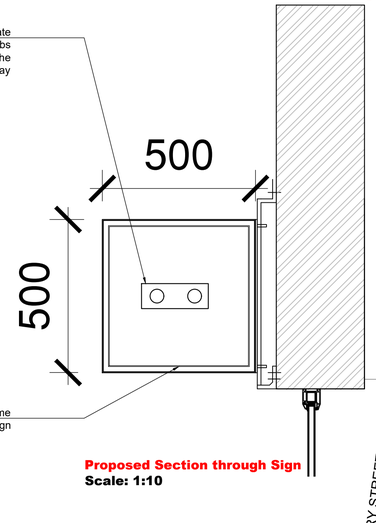

3mm Aluminium frame to support Acrylic sign

Proposed Section through Sign
Scale: 1:10



Proposed Photomontage

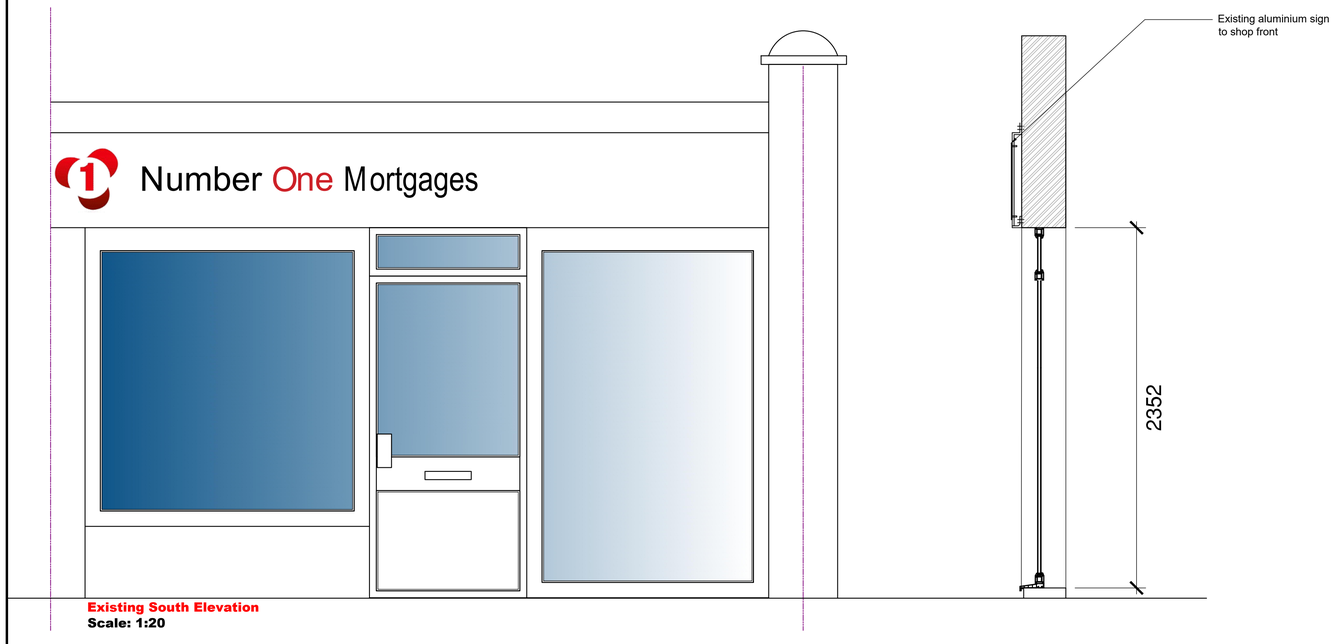

Existing South Elevation
Scale: 1:20

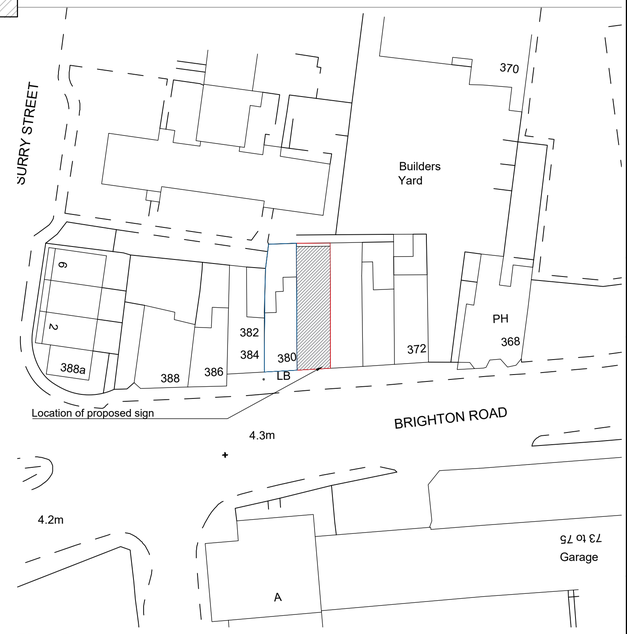

Block Plan
Scale: 1:500



Location Plan
Scale: 1:1250

NOTE:

This drawing is to be read in conjunction with the Construction Notes and Structural Engineer's details.

The Contractor is responsible for all setting out and must check levels and dimensions on site before ordering materials or commencing work.

Refer to written dimensions only. Do not scale from drawings, except for the purposes of Planning assessment.

The Architect is to be immediately notified of any omissions or discrepancies.

Building work should not commence until all statutory approvals have been granted, i.e. Planning, Building Control, etc.

If a public sewer is discovered, consent to 'Build-over/Close-to' may be required from the Water Authority.

PARTY WALLS:

Work to Party Walls (including insertion of flashings, beam bearings, etc) are subject to Party Wall agreements with neighbours and are to be arranged by the Client in accordance with the Party Wall Act (i.e. Providing two months written notice)

Below ground drainage - Surface Water
Below ground drainage - Foul Water
Discharge pipes
Existing structure
Proposed structure
Removed structure
Section line

Revision	Date:	Details:	Initials
B	27/02/2020	Planning Amendments	DLS
A	25/02/2020	Planning Amendments	DLS

These drawings and designs are the property of Shear Architectural Design Ltd and must not be copied, retained, or used without prior written consent. © Copyright

CREATE INSPIRE ENHANCE

SHEAR ARCHITECTURAL DESIGN

Top Floor
Trafalgar House
Newhaven
East Sussex
BN9 9DD

07881 656512
info@sheararchitecturaldesign.co.uk

PROJECT:
378 Brighton Road
Shoreham by Sea
West Sussex
BN43 6RE

DRAWING TITLE:
New lightn box sign to external fascia

NORTH

DATE: 15/02/2020
SCALE: Various
DRAWN: DS
CHECKED: -
SHEET OF

PROJECT NUMBER:	DRAWING NUMBER:	REVISION:
20/13	SK1	B

METERS @ 1:50 | METERS @ 1:100 | METERS @ 1:200 | METERS @ 1:500 | METERS @ 1:1250