BACK OF PROPERTY OVERLOOKING GARDEN

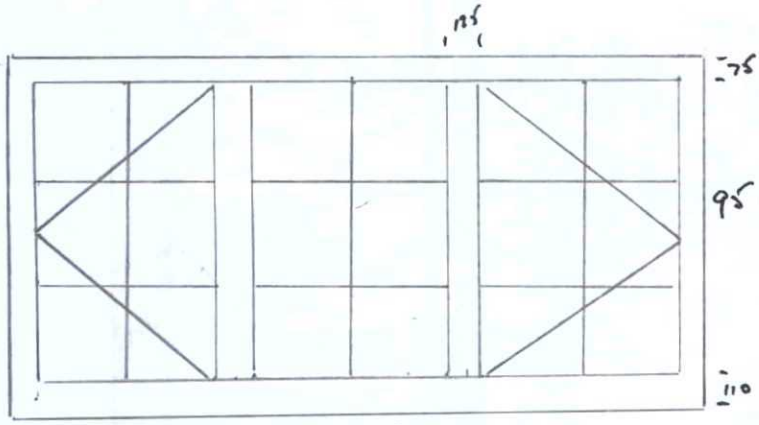

ALSO MIDDLE WINDOW OVERLOOKING WEST AVENUE

T.P. OFFICE COPY

2 BAYS OVERLOOKING WEST AVENUE (MID-SECTION)

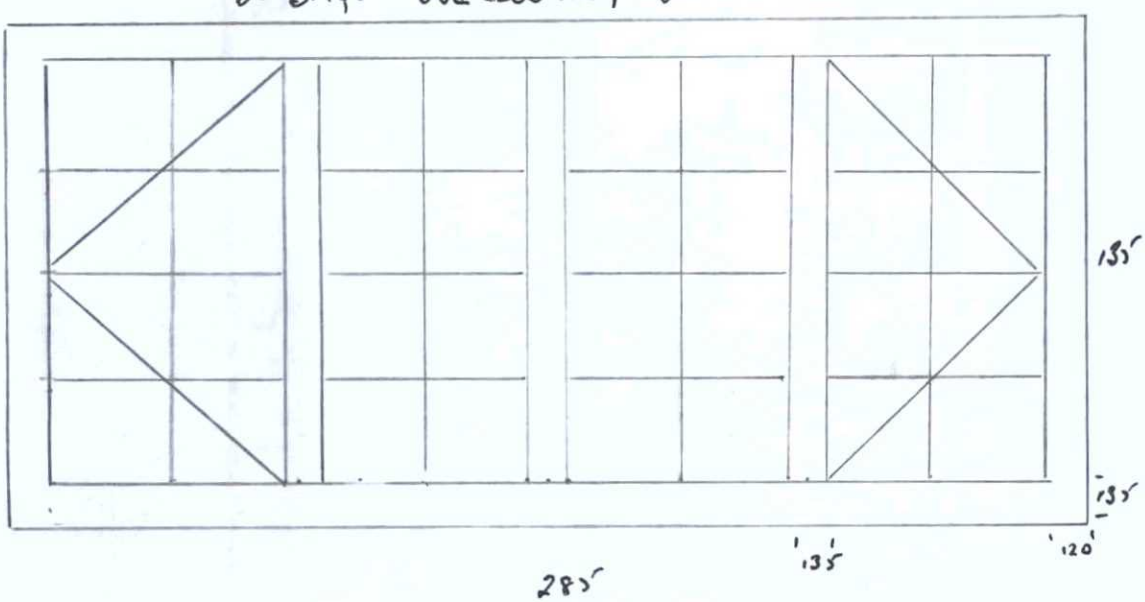

BOROUGH OF WORTHING
DEPOSITED 4/4/11
TP REF No.
WB/ 111 0852pm

1:20

BAY SIDES x 2

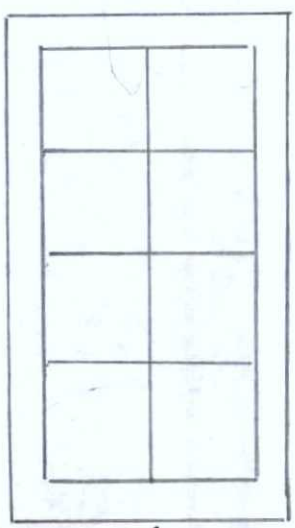

KITCHEN

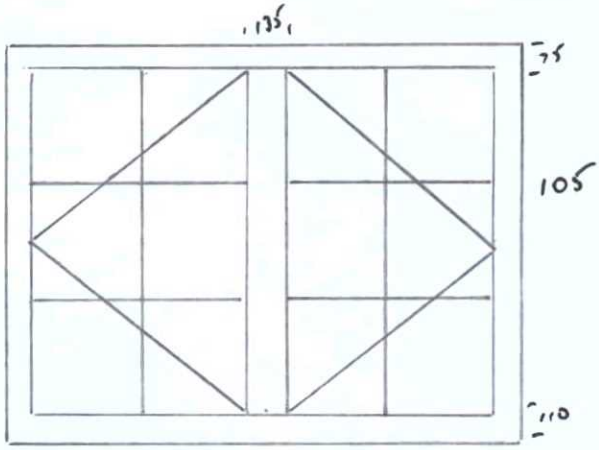

BATHROOM

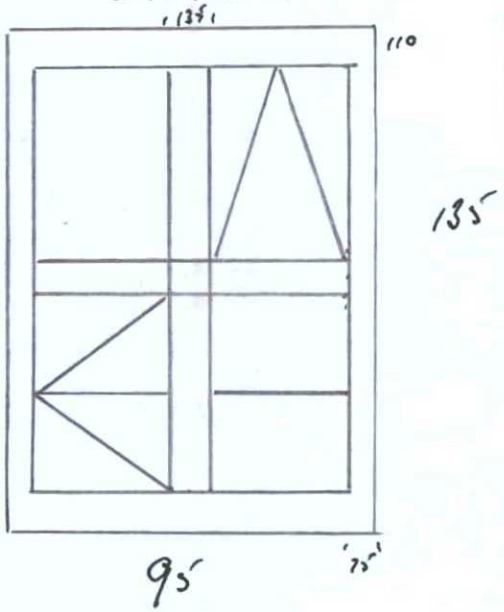

LANDING

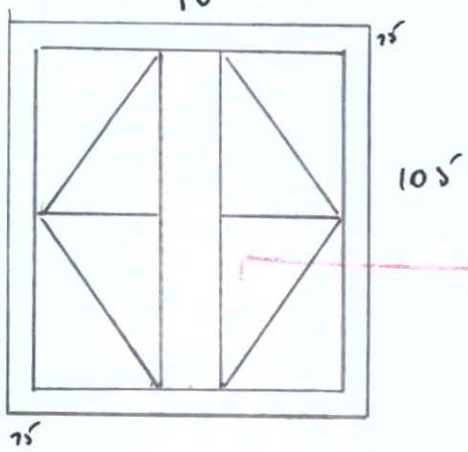

T.P. OFFICE COPY

width of the Georgian bar is 18mm

1:20

BOROUGH OF WEST LOTHIAN
DEPOSITED 4/4/11
TP REF No.
WB / 11 / 0032/FUL