Installation Guidelines

Horizontal section through top sash

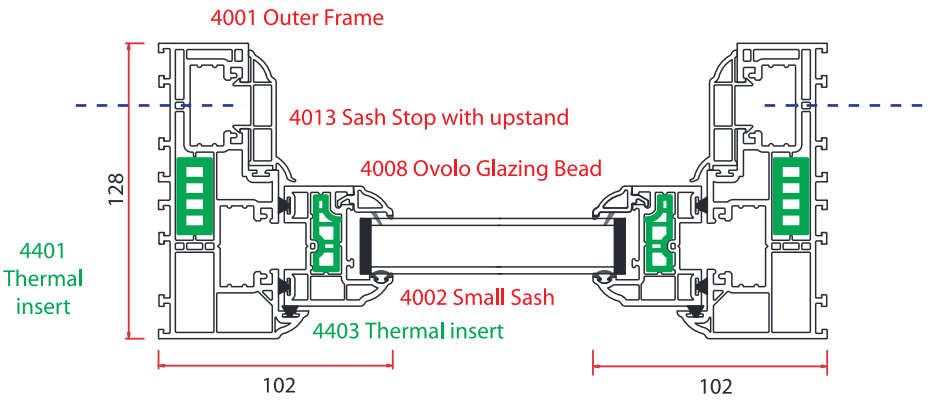

Vertical section through sash

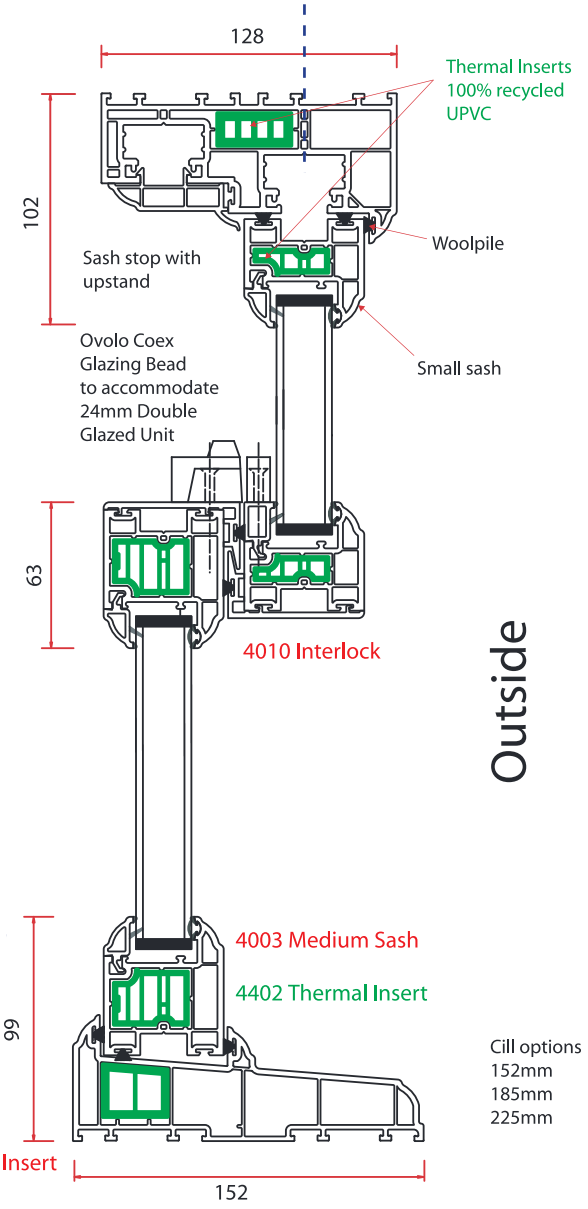

Horizontal section through bottom sash

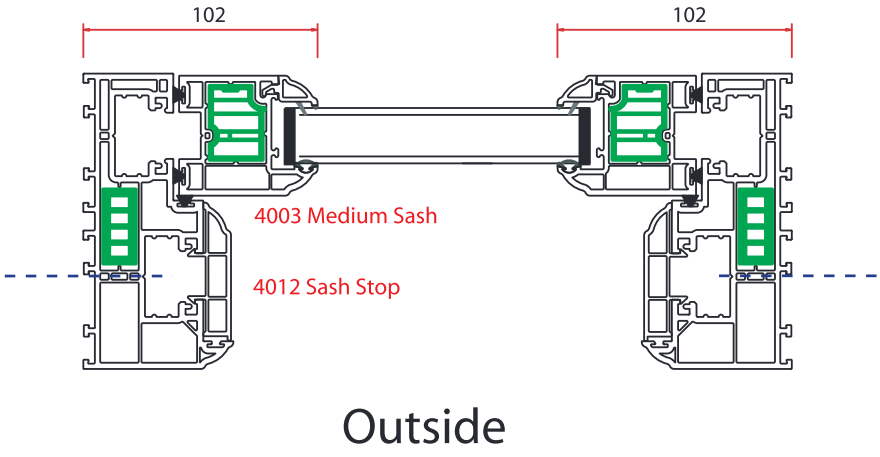

Note: Thermal inserts (coloured green) are manufactured from 100% recycled PVC-U.

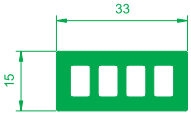

4401
Thermal Insert
For 4001 Outer Frame

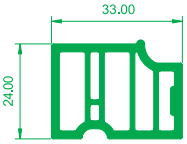

4402
Thermal Insert
For 4003 Medium Sash

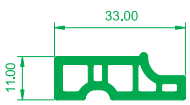

4403
Thermal Insert
For 4002 Small Sash

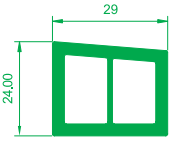

4405
Thermal Insert
For 4005,4006,4407 cill

ECOSlide
The No.1 Sash Window Brand