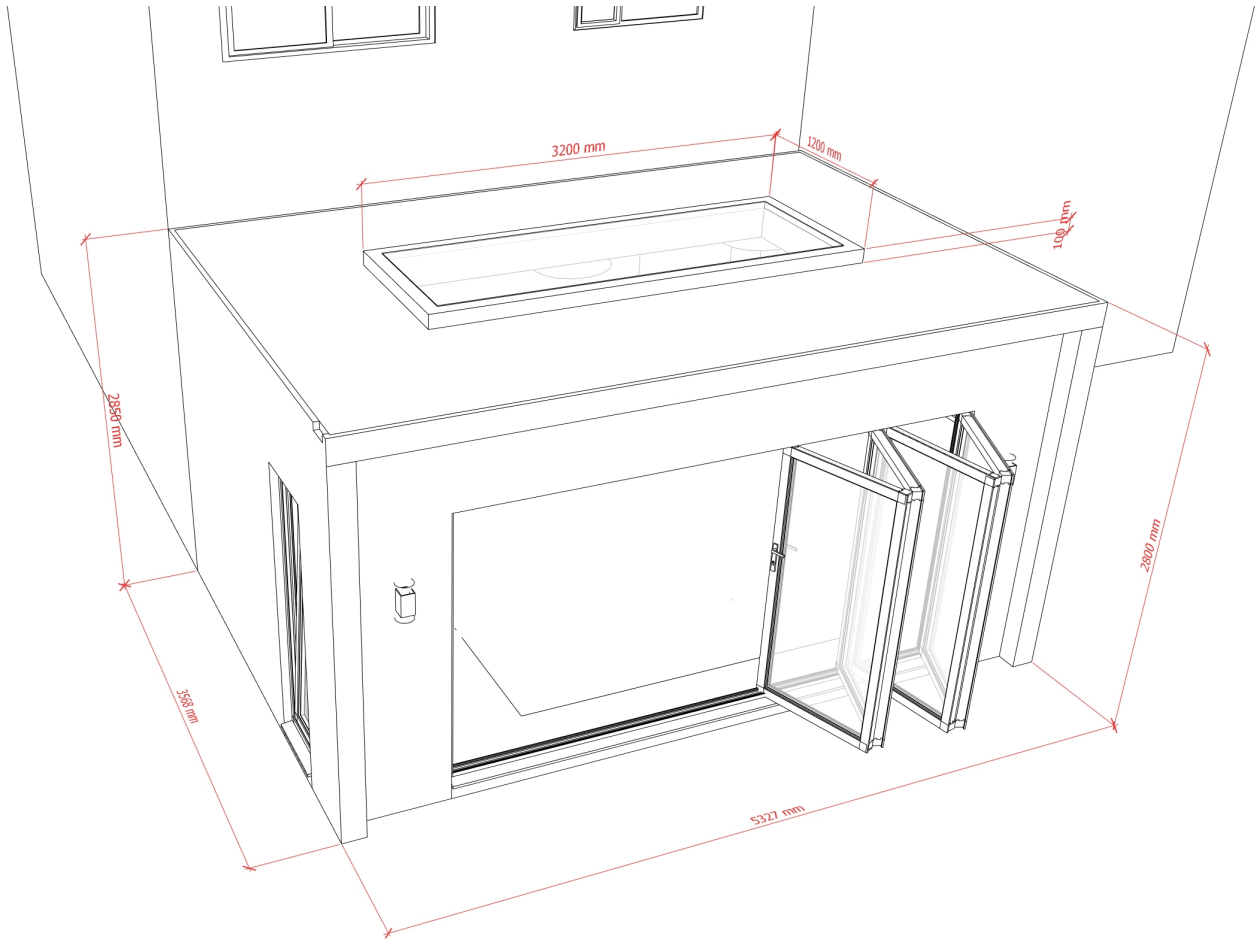
3200 mm
1200 mm
100 mm
2850 mm
3568 mm
5327 mm
2800 mm