PROPOSED

ADUR & WORTHING PLANNING SERVICES

PLAN	AWDM/ 0896/18
DATE VALID	21 JUN 2018

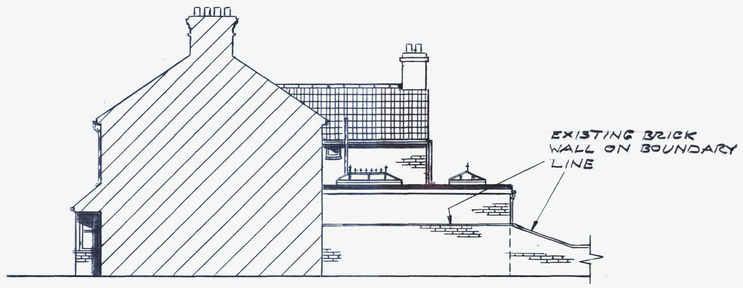

SIDE ELEVATION
1:100

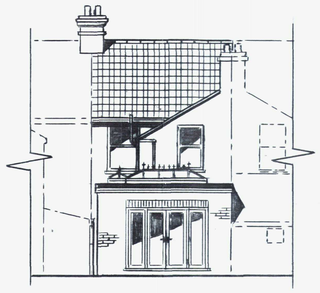

REAR ELEVATION
1:100

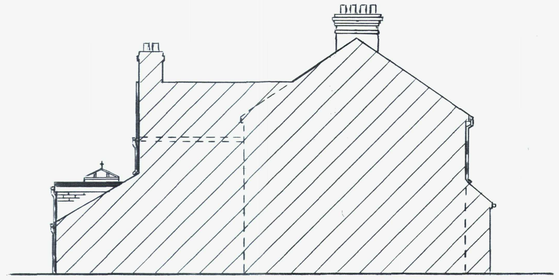

SIDE ELEVATION
1:100

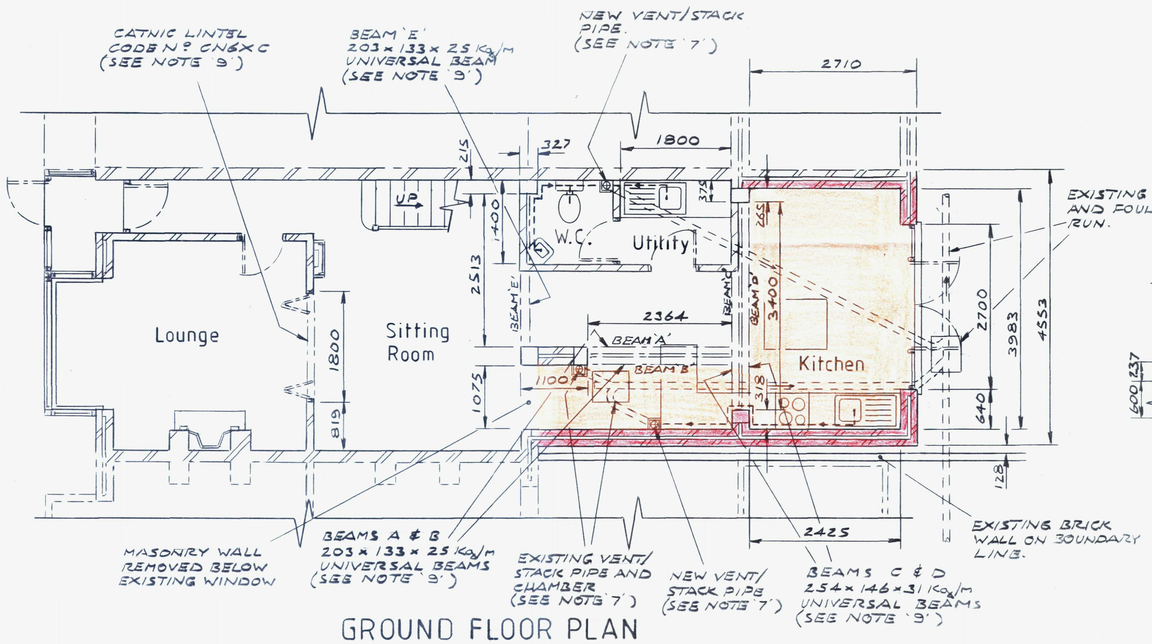

GROUND FLOOR PLAN
1:50

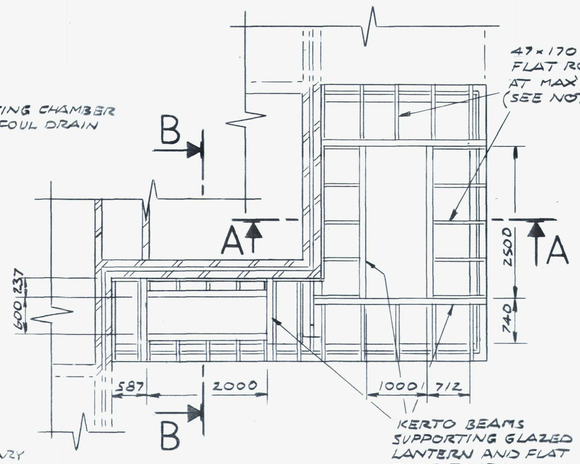

ROOF PLAN
1:50

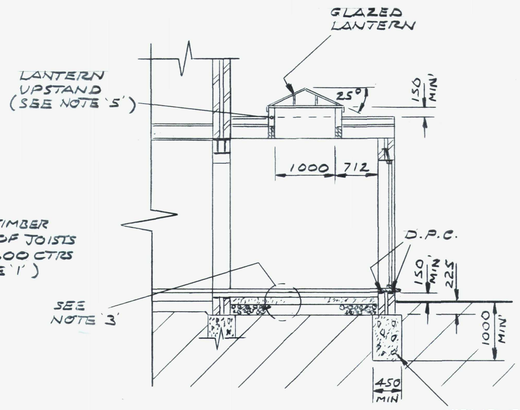

SECTION A-A
1:50

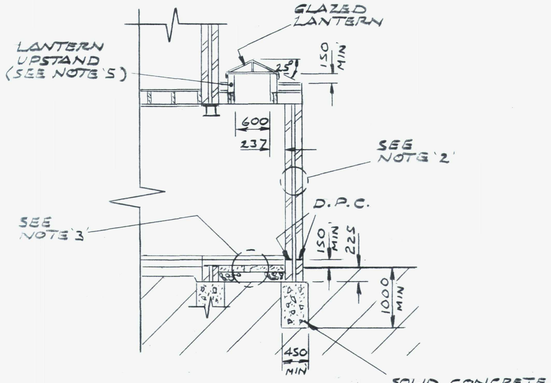

SECTION B-B
1:50

0 1 2 3 4 5 6 7 8 9 10
1:100 Scale Bar-Metres

0 1 2 3 4 5 6 7 8 9 10
1:50 Scale Bar-Metres

Reference
(S)01/1829 - CONSTRUCTION NOTES AND TECHNICAL SPECIFICATION.
DENRA/1829/1- EXISTING FLOOR PLAN AND ELEVATIONS.
SITE LAYOUT PLAN 1:500
LOCATION PLAN 1:1250

Copyright ©

Scale	1:50 & 1:100
Drawn	
Date	June 2018

DENRA DESIGN Ltd
Tel: 01403 269861 / 07973 911 870
denrichards.associates@btinternet.com

Title
PROPOSED GROUND FLOOR EXTENSION WITH INTERNAL STRUCTURAL ALTERATIONS AT 34 GORDON ROAD, SHOREHAM-BY-SEA, WEST SUSSEX, BN43 6WE.

Rev.	Rev.	Sheet Size A1	DIMENSIONS IN MILLIMETRES

Drg No. DENRA/1829/2 Rev.