NW - WORTHING SOUTH STREET

0m 0.5m Scale 1:5 @ A1

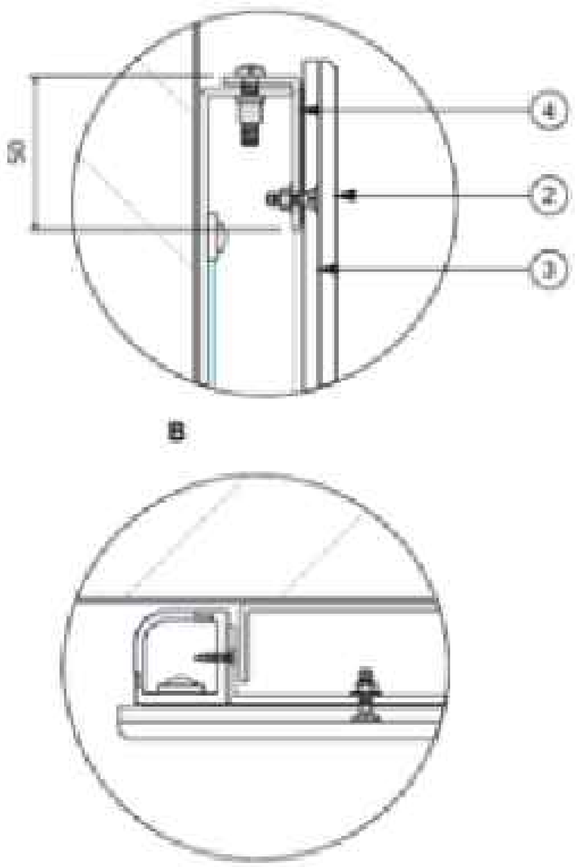

PLAN DETAIL OF ACCENT

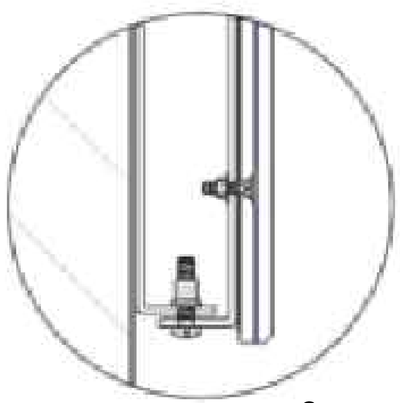

Surround Detail 1:1

2. PANEL A from 5mm Clear acrylic to have 2.5mm bevelled front edge and router cut out aperture to suit machine type, all edges to have buff polished finish. Panel c/w DTM printed detail to rear, then flooded with d/sided VHB tape except logo area.

3. PANEL B from 5mm Clear acrylic to have router cut out aperture to suit machine type, all edges to have buff polished finish. Face of panel c/w csk machine screws set in place with silicone (to avoid damage to PANEL A) prior to being bonded to the rear of PANEL A via VHB tape. Rear of panel flooded with matt Black vinyl to block light except for the Daisy Wheel and Royal Bank of Scotland which illuminate.

4. FACE LID from 2.5mm folded aluminium to a depth of 30mm c/w fret cut out aperture to suit machine type and area around logo. Lid to have 25x25x3mm aluminium angle fitted around aperture, all finished Champion Purple (PMS 7678c satin) externally and Traffic White (RAL 9016 gloss) internally (header section)

Aperture edges to be bevelled as well as the outer edges of the acrylic face panel

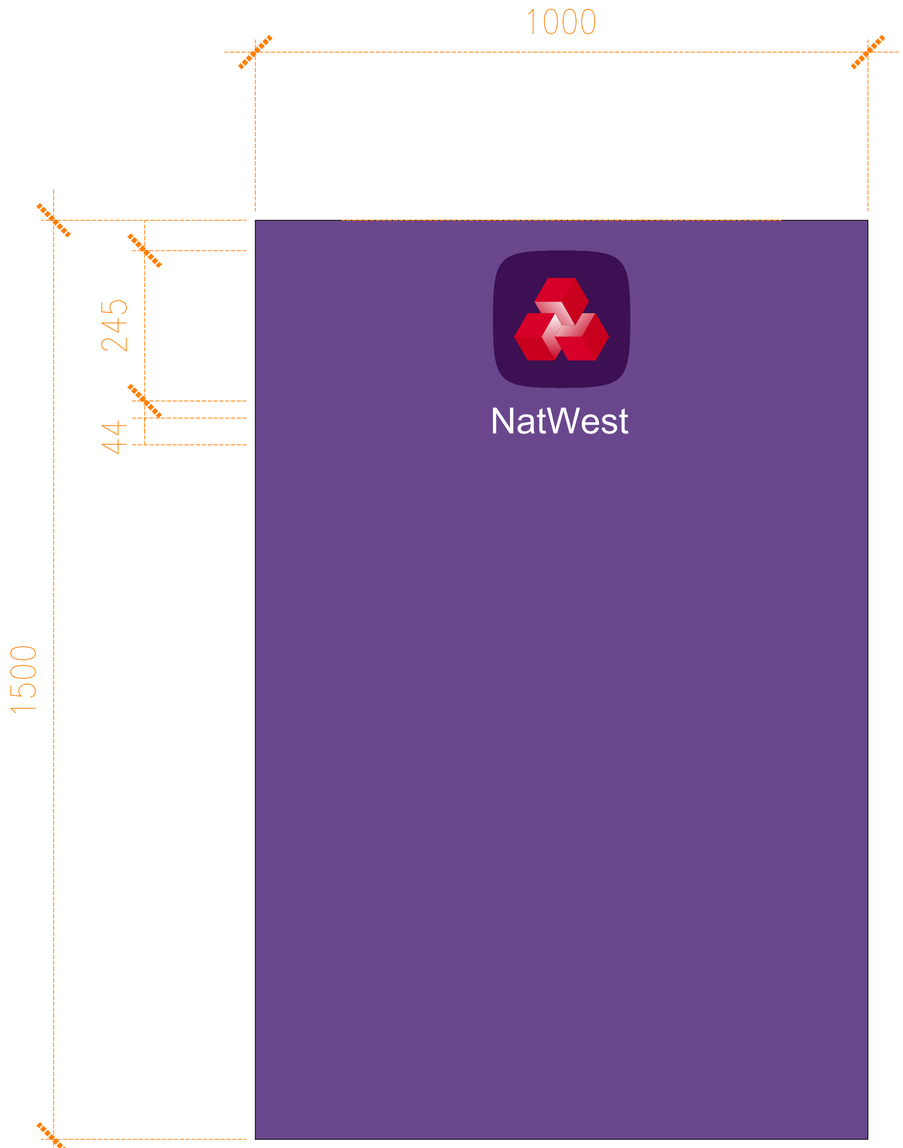

Face 1no @ 1:5

Materials:
- Face panel from clear acrylic.
- Body from aluminum.

Colour:
- Body painted Champion Purple - PMS 7678 satin.
- White lettering - gloss finish

Size:
- 1500mm (h) x 1000mm (w) x 44mm(d)

This drawing is the copyright and property of NatWest Group plc. It must not be copied or published without written consent. Only scale from this drawing for planning consent purposes.

TATE STEVENSON ARCHITECTS LTD
Unit 1 Rawdon Court
Moira
BT67 0LQ
Tel. +44 (0)28 9261 1222
Fax. +44 (0)28 9261 3834
E-mail studio@tatestevenson.com

McLaughlin & Harvey

rev	date	description	drawn	checked

NatWest Group

address
27 South Street,
Worthing,
England,
BN11 3AR

ref no. -
sortcode -

description
SSTP Programme
ATM SURROUND

status
PLANNING
PLANNING

IPMS1 - sqm -
IPMS2 - sqm -
IPMS3 - sqm -

scale 1:5 , 1:1
paper size A1
brand
drn - date MAR 25
chk - date MAR 25

drawing number 1206-16-94-D-05
rev.