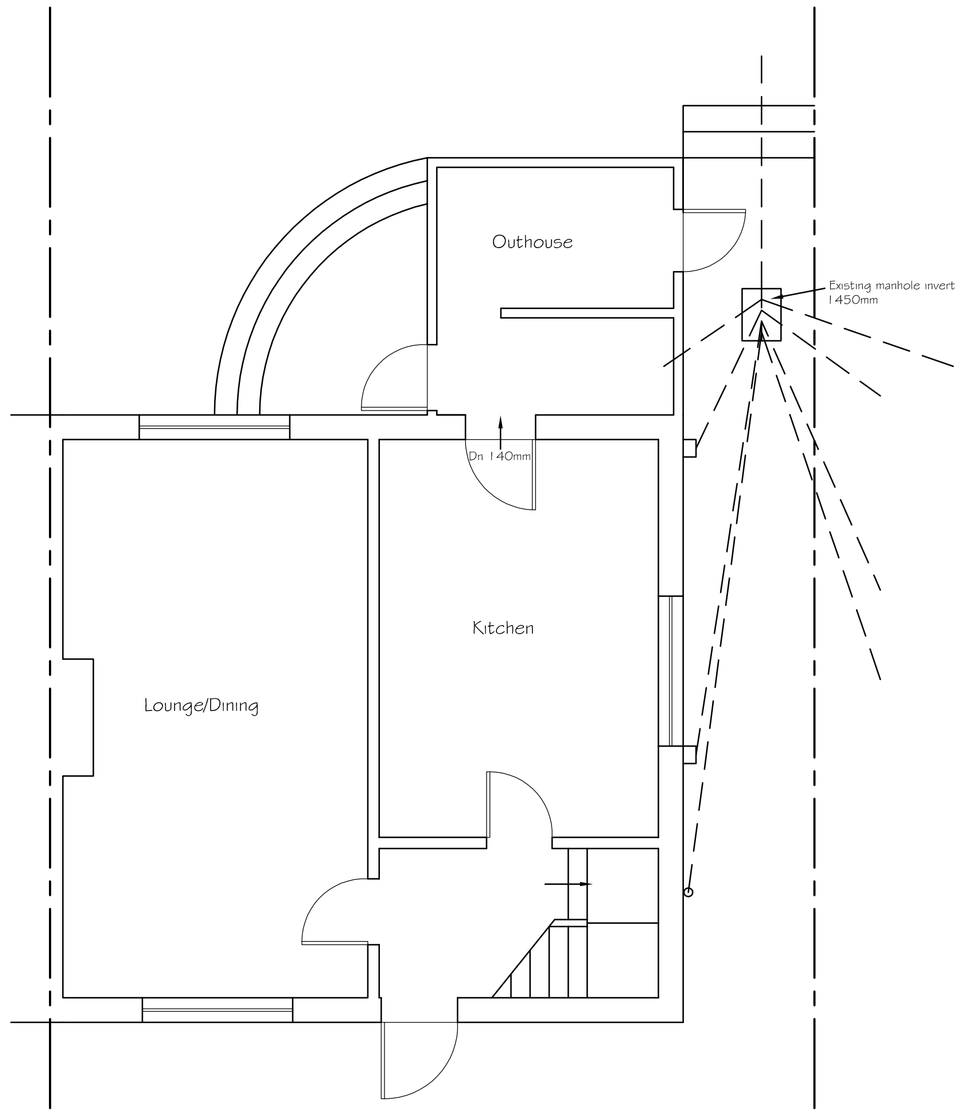

Existing Ground Floor Plan

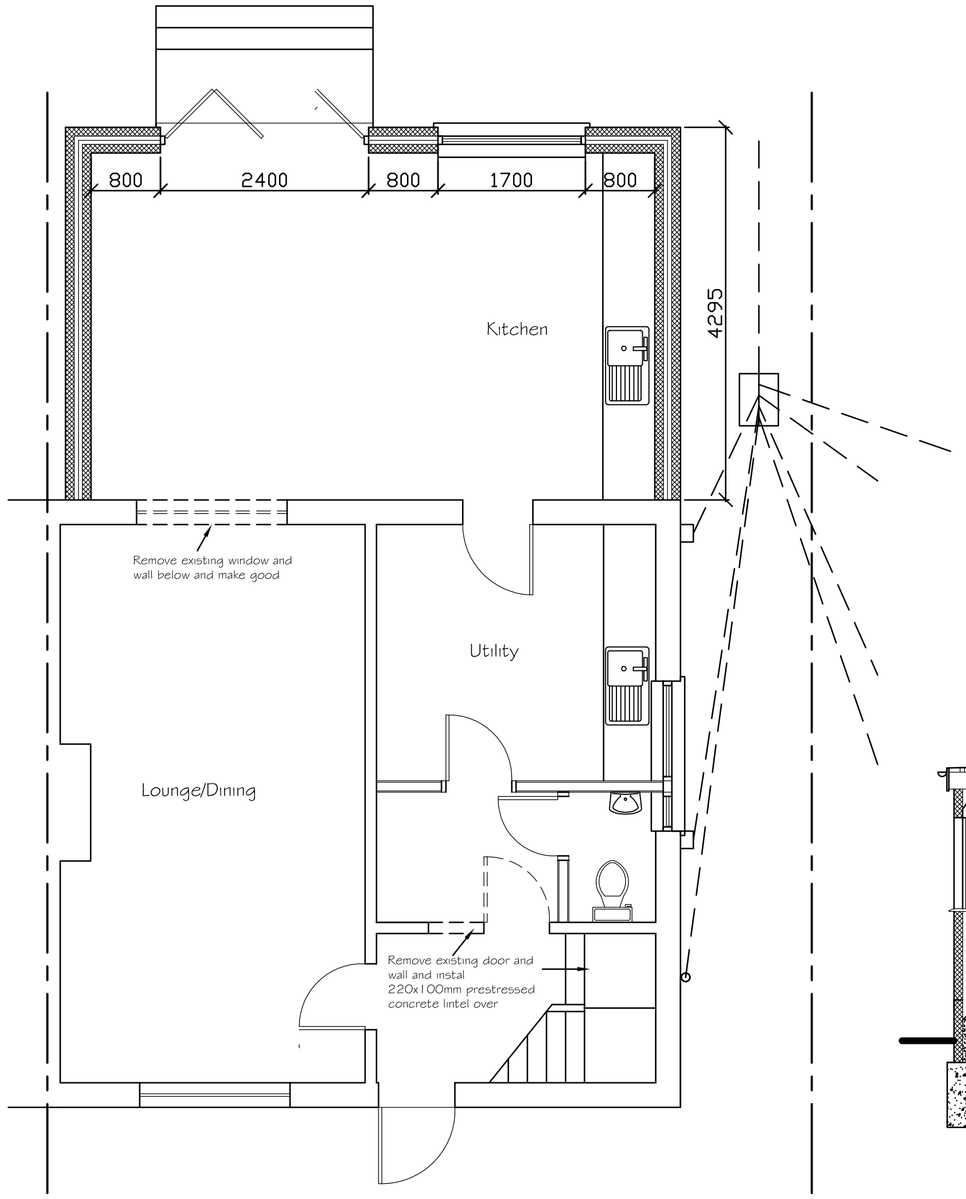

Proposed Ground Floor Plan

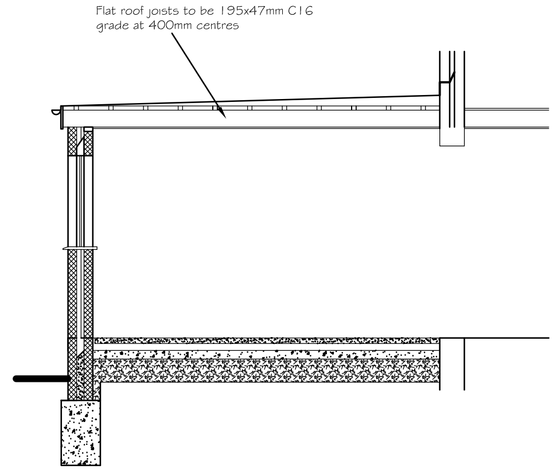

Proposed Cross Section

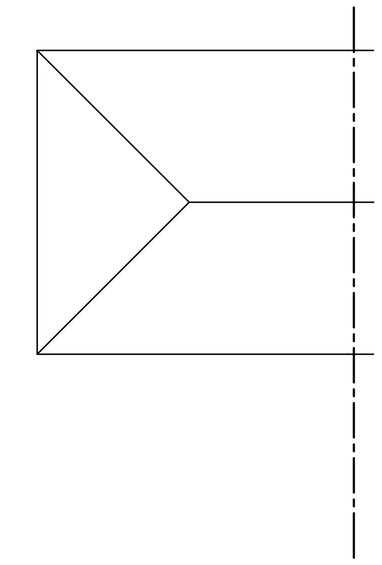

Existng Roof Plan

0 0.5 1 2 3 4 5 6 7 8 9 10

SCALE 1:100

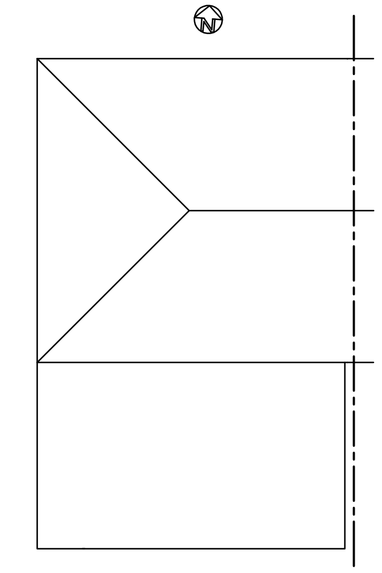

Proposed Roof Plan

0 0.5 1 2 3 4 5 6 7 8 9 10

SCALE 1:50

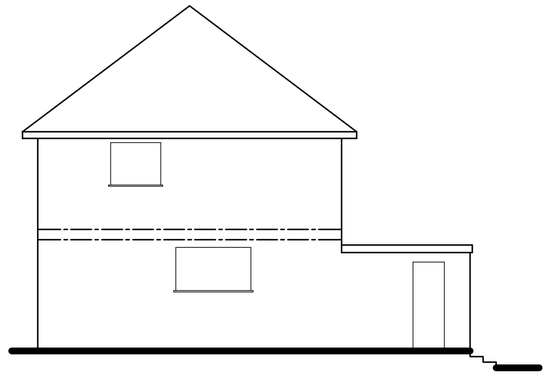

Existing Side (West) Elevation

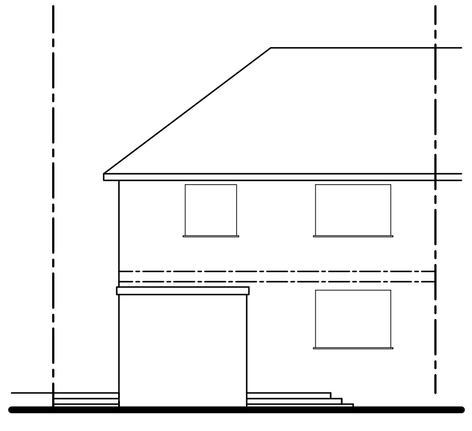

Existing Rear (South) Elevation

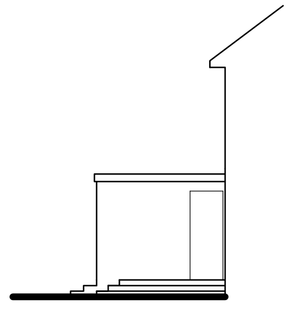

Existing Side (East) Elevation

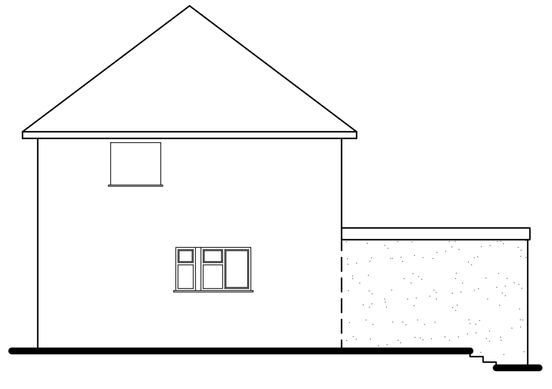

Proposed Side (West) Elevation

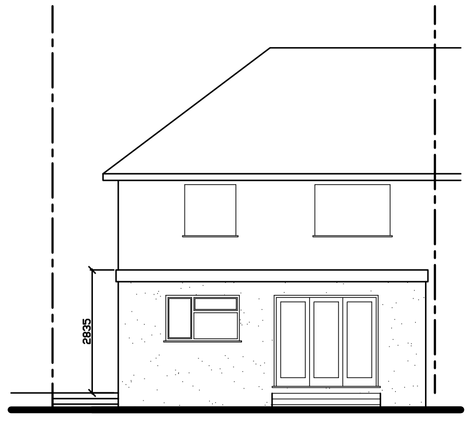

Proposed Rear (South) Elevation

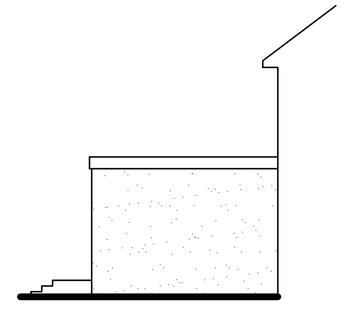

Proposed Side (East) Elevation

0 0.5 1 2 3 4 5 6 7 8 9 10

SCALE 1:100

Tony Rogers
Building Consultants
Address: 40 Dawn Crescent, Upper Beeding
West Sussex, BN44 3WH
Telephone: 01903 815225 Fax: 01903 815225

Rev.	Date:	Revision Description:

Client: Mr & Mrs D Dramis

Address: 12 Highdown
Southwick
West Sussex
BN42 4QS

Project: Proposed single storey rear extension

Scale: 1:50 1:100
Paper Size A1

Date: March 2021

Drawing No: 21/1447/01

Drawn By: AWR

Revision: