10mm thk MS endplate fully welded to CHS
4M10 dia resin anchor bolts fixed to brickwork (min. 90m long embedment)

Markup
20/4/22
54984/SK500

42.4 x 3.2mm TUBULAR HANDRAIL SET OVER
12mm ROUND STALK TOP SET OVER
42.4 x 3.2mm TUBULAR STANDARDS C/W
10mm THICK BASEPLATES C/W 2x M12
COACH SCREWS FIXED TO TIMBER JOISTS,
WEATHER COLLARS, 10mm TOUGHENED ETCHED
GLASS INFILL PANELS CONNECTING TO THE
STANDARDS WITH GLASS CLAMPS.

WELDS LEFT AS LAID.

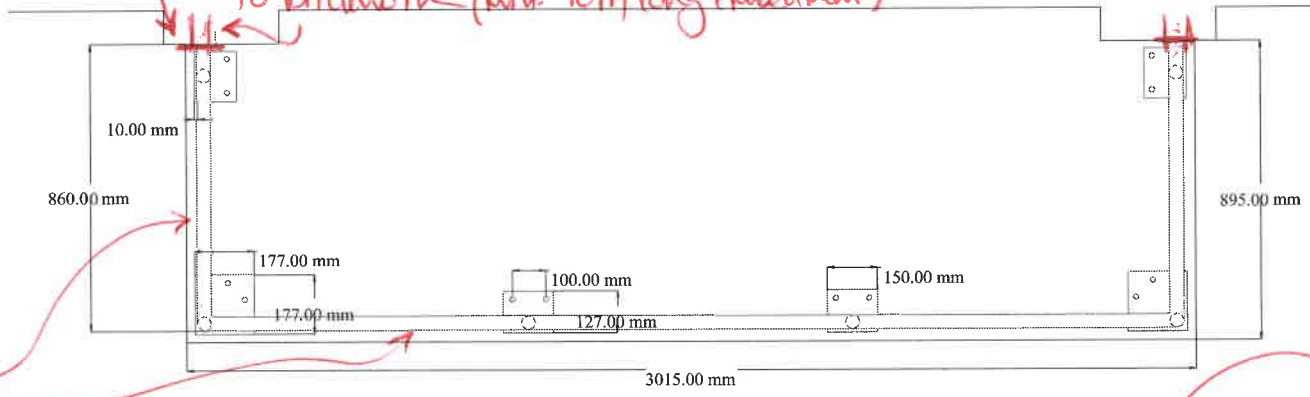

continuous handrail to be min. 76.1x50 CHS (S355 + galvanised)

glazed infill panel to be designed for service loads = 1.0kN/m² (or 0.5kN)

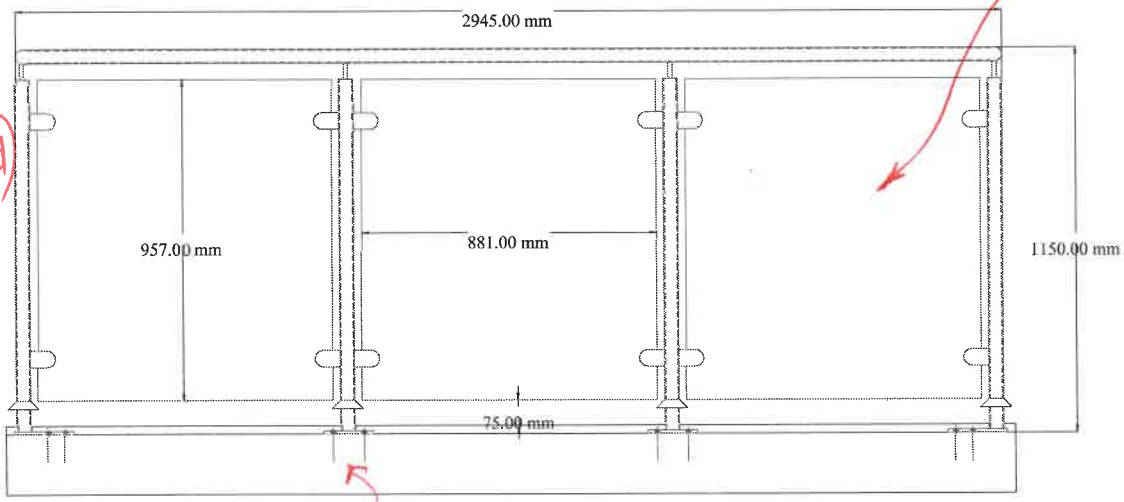

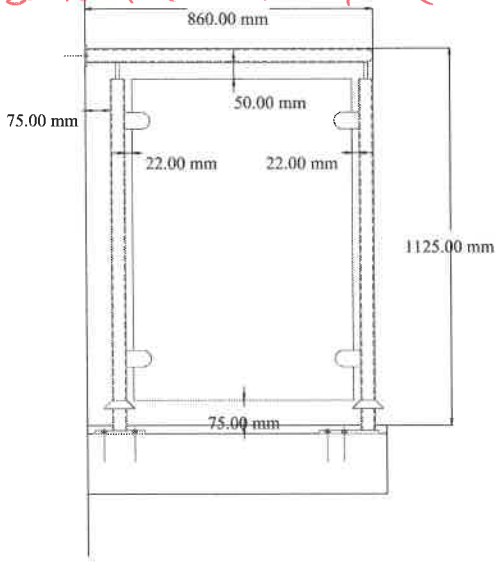

post size
48.3x5.0 CHS
(S355 + galvanised)

fixings into solid timber and not through floorboards

TOLERANCE +/- 3mm

STRUCTURAL CALCULATIONS ARE THE RESPONSIBILITY OF THE CUSTOMER. APPROVAL IS FOR DESIGN AND STRUCTURAL SUITABILITY. ANY BUILDING REGULATIONS REQUIRED FOR THIS PROJECT NOT COVERED BY THIS DRAWING ARE TO BE ADVISED BY THE CLIENT IN WRITING.

IRON DESIGNS LIMITED
ARCHITECTURAL METALWORKS
8 Church Road, Portslade,
Brighton, East Sussex, BN41
1WA
Web Site www.irondesigns.co.uk
Tel: 01273 423685
Fax: 01273 418927.

Drawing No:	21234-1
Date:	1st APRIL 2022
Description:	8off EXTERNAL BALCONY BALUSTRADES
Finish:	GALVANISED, PPC BLACK GLOSS.
Project:	EDE - PENHILL COURT, PENHILL ROAD, LANCING.

copyright IRON DESIGNS LIMITED 2010©

DIXON HURST

CONSULTING CIVIL & STRUCTURAL ENGINEERS

Job Title	Penhill Court		Item	Balustrading	
Designed by	Date	Checked by	Job No. 5484	Sheet 501	Rev.

Handrail.

try 76.1 x 5.0 CHS ; no internal supporting posts have been assumed.



I_{yy} = 70.9 cm⁴

moment capacity M_c = 7.92 kNm (S355)

Applied design load = 0.74 x 1.33 = 0.984 kN/m

Service load deflection of handrail based upon a simply supported effective span of 3.9m.

$$\delta = \frac{5 \times 0.74 \times 3.9^4 \times 10^9}{384 \times 205 \times 70.9} = 15.3\text{mm} < 25\text{mm}$$

post size : 48.3 x 5.0 CHS.

Wall fixing : 1 on the endplate + 4No. resin bolts

working load pull-out force = 0.74 x 3.9/2 = 1.44 kN.

Tension on the bolts

76.1 x 5.0 CHS continuous handrail on 48.3 x 5.0 CHS posts. All steelwork to be S355 and galvanised. Handrail to be fixed back to wall with 4 M10 dia resin anchor bolts into brickwork