From: Michael Saunders <MikeS@pdp-architects.co.uk>
Sent: 22 February 2010 17:23
To: Hannah Barker
Cc: Lee Morgan
Subject: Burdwood House - Eternit Cladding Colour
Attachments: 27813-PD104B Elevations.pdf; Eternit Brochure.pdf

Follow Up Flag: Follow up
Flag Status: Completed

Hannah,

Our client has asked us to look into the option of having the Eternit cladding on this scheme coloured 'Blue Grey' as opposed to the 'Dark Oak' approved colour.

Attached is a PDF drawing showing the elevation with the Blue Grey cladding and a PDF brochure from Eternit showing the product and colour within. If you require hard copies of the drawings or a sample panel of the product, we can arrange to have that sent to you.

We feel from a design point of view the Blue Grey would not detract from the overall composition and elevation and lends itself to the seaside location and look forward to your comments, and hope you will be able to approve this as a non-material change.

Regards,

Michael Saunders

pdp architecture llp

2 Beechworth Road
Havant
Hampshire
PO9 1AX

Tel: 023 9248 1100
Fax: 023 9247 5050
Email: pdp@pdp-architects.co.uk
Web: www.pdp-architects.co.uk

This e-mail (and any files transmitted with it) is intended only for the above addressee(s). It may contain confidential information. If you are not the addressee you must not copy, distribute, disclose or use any of the information in it. If you have received it in error please delete it and immediately notify the sender. All reasonable precautions have been taken to ensure that this e-mail is free from any virus, however, the recipient should verify this to be the case.

At PDP, we appreciate all comments received from clients, take pride in providing an excellent service and place value on our ability to correct any errors. Should you wish to comment on any aspect of the service that we have given you, please do so in confidence through our e-mail address.

PROPOSED MATERIALS SCHEDULE

① - FACING BRICKWORK (RED)

② - DETAIL BRICKWORK (BUFF)

③ - THRU COLOUR RENDER

④ - WINDOWS, DOORS, FACIAS & SOFFITS TO BE PVCu

⑤ - CONCRETE INTERLOCKING TILES

⑥ - HORIZONTAL ETERNITE TIMBER EFFECT CLADDING

⑦ - STEEL FEATURE BALCONIES

(ALL MATERIALS TO LOCAL PLANNING AUTHORITY APPROVAL)



BRIGHTON ROAD STREET SCENE (A1 1:250)



SOUTH (BRIGHTON ROAD) ELEVATION



EAST (SIDE) ELEVATION

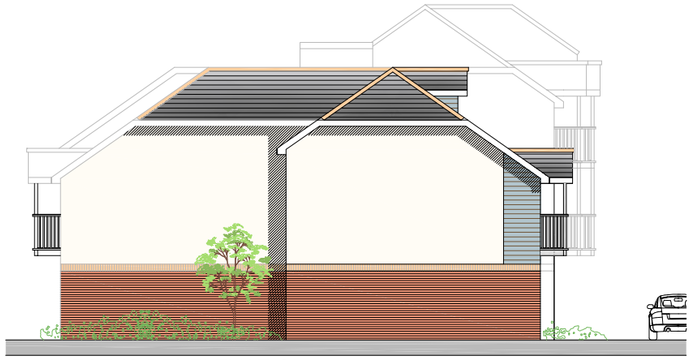

WEST (SIDE) ELEVATION



NORTH (REAR) ELEVATION

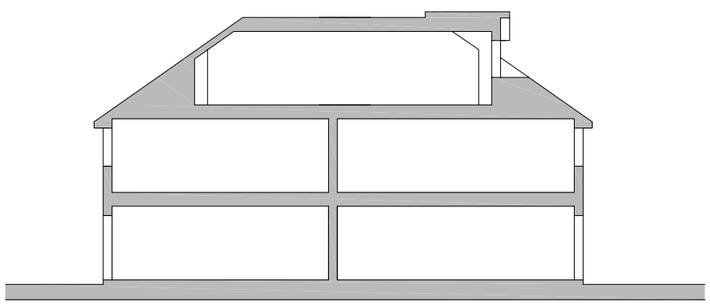

SECTION A - A

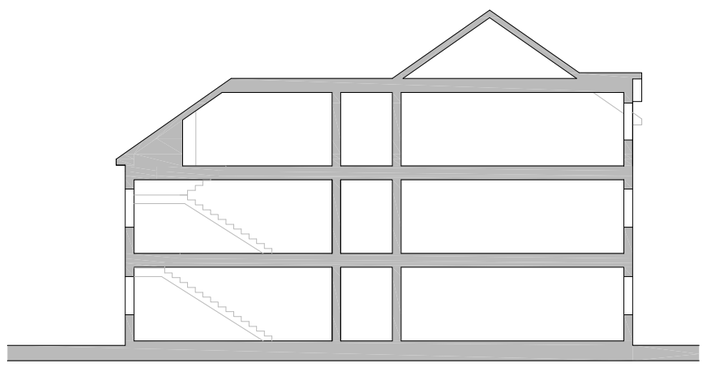

SECTION B - B

notes

this drawing is the copyright of the parnell design partnership llp and must not be reproduced in whole or part or used for the execution of works without their permission.

all dimensions to be checked on site prior to commencement of construction works and the architect notified of any discrepancy.

figured dimensions are to be used in preference to scaled dimensions.

no deviation from this drawing will be permitted without prior consent of the architect.

all drawings are prepared subject to a full measured and structural survey of the buildings and site.

all structural work is subject to the appointment of a structural engineer to confirm and agree the structural proposals.

os promap licence no. 100020449.

scale width 100mm @ a1 - 50mm @ a3

revision	notes	date	drawn	check
A	PV cells shown	18.11.2009	MAS	MBW
B	Cladding shown as Eternit Blue Grey colour	22.02.2010	MAS	MBW

client

ROSEMARY SIMMONS MEMORIAL HOUSING ASSOCIATION LTD

parnell design partnership llp

chartered architects
town planning
interior design consultants

2 beechworth road, havant, hampshire, po9 1ax
tel: 023 9248 1100
fax: 023 9247 5050
email: pdp@pdp-architects.co.uk
website: pdp-architects.co.uk

project	Proposed Development Burdwood House 143 Brighton Road, Lancing
detail	Elevations & Typical Sections
drawn	MAS
checked	MAS
date	March 2008
status	Planning
a1 scale	1:100
a3 scale	1:200
	27813 - PD104 rev B



CI/SfB | | (41) | Rf9 | |
April 2009







Operal and Cedral

MARLEY Eternit

Operal and Cedral

Marley Eternit's Operal and Cedral ranges complement each other perfectly to offer creative, integrated and cost-effective external cladding solutions for buildings.

Sharing the same colour range, but offering different textures and module shapes and sizes, woodgrained Cedral planks can be used to contrast the flat, lightly textured surface of Operal.

Equally, both can be used on their own merits, with Operal being easy to work and handle, and ideal for both residential and larger cladding projects where a flat, clean and crisp finish is needed. Cedral is an ideal low maintenance alternative to timber planking in residential projects without any loss of visual impact.





↑ Cedral Weatherboard

Weatherboard is the ideal low maintenance, rot free alternative to traditional timber weatherboarding.

With the visual appeal of natural timber, simplicity of installation and resistance to rot, Weatherboard is an attractive, low maintenance alternative to PVCu.

Weatherboard can be supplied in Natural finish for site painting, or in a range of 22 factory applied solid colours and 6 woodstains.

Our bespoke colour service allows housebuilders and specifiers to maximise their aesthetic options by offering an extensive range of factory-approved paint options to meet project requirements.

With a colour range that complements Operal (pages 8-9), Cedral offers integrated solutions for external cladding design.

← Operal

This impact resistant, durable and flat cladding is ideal across a range of applications from a residential soffit to a rainscreen cladding skin for a low rise commercial unit.

Operal is cost effective and easy to fix, and with the same range of colours, performance and maintenance levels as Cedral, is an ideal cladding partner.

With a colour range that complements Cedral (pages 8-9), Operal offers integrated solutions for external cladding design.

Operal
product data



Advantages

- Lightweight
- Easy to fix
- Class 0 fire performance
- No maintenance necessary
- BBA Certificate No. 06/4355

Applications

- Soffits and fascias
- Balcony panels
- Infill panels
- Dormer cheeks
- General cladding

BBA BRITISH BOARD OF AGRÉMENT
CERTIFICATE No 06/4355

Standards

The technical properties of Operal sheets are in accordance with the prescriptions of BS EN 12467:2004, Category A, Class 3.

Manufacture

Operal is an autoclaved fibre cement sheet which is manufactured from a mixture of cement, organic fibres, fillers and water.

Colour and availability

In order to give the best possible service, the most popular colours and sizes are kept in stock. Please see page 8-9 for the full colour range.

Dimensions

Sheet sizes	3050 x 1220mm 2500 x 1220mm
Nominal thickness	9mm
Nominal weight	10.8kg/m^2
Tolerance on thickness	±10%

Properties (air dry)

Density	1230kg/m^3
Bending strength: Longitudinal Transverse	 23N/mm^2 17N/mm^2
Modulus of elasticity	8,000N/mm^2
Hygroscopic movement	2.1mm/m
Co-efficient of linear expansion	15 x 10^{-6}m/mK
Thermal conductivity	0.25W/mK
Reaction to fire: Building Regulations EN 13501-1	 Class 0 A2-s1-d0



Cedral Weatherboard product data



Advantages

- Excellent aesthetics
- Resistant to rot and maintains its looks
- Low maintenance
- Easy to install
- Use in the same way as wood
- Stands up to the harshest weather conditions
- Class 0 fire performance
- Immune to attack by pests and insects
- Weatherboard is ideal for use where traditional timber boards might be considered especially for facades and window and door surrounds
- BBA Certificate No. 06/4299

BBA BRITISH BOARD OF AGRÉMENT
CERTIFICATE No 06/4299



Domestic

In housebuilding, the material enables specifiers to achieve a heritage-style look, adding to the kerb appeal. In conservation areas where plastic materials are often out of the question, the convincing timber-like appearance of Weatherboard is designed to meet strict planning requirements.

Commercial

Typically, Weatherboard can be used to recreate or achieve a weatherboarding-type or 'colonial' architectural effect such as that often found in regional vernacular architecture.

It can also be used to bring a contrasting planking effect to predominantly brick-clad or flat-clad elevations. The material can be employed on small or large scale areas of a building to break up the repetition of elements, pick up material themes, or create subtle interplays of colour and shape. Not only does Weatherboard satisfy popular, current life-cycle costing strategies, it also solves the maintenance problem associated with comparable materials.



Refurbishment

In Local Authority housing, Weatherboard can be used to add value to new build schemes; or for refurbishment purposes, where there is a requirement for an effective form of overcladding or remedial cladding to replace equivalent but defective materials.

Weatherboard can be used to replace like materials such as timber planking, PVCu sidings and similar materials. It can add interest to gable walls; adorn dormers; clad window areas that have become an eyesore; give garages a make-over; beautify barn conversions. The use of the material is limited only by your imagination.

Standards

The technical properties of Weatherboard sheets are in accordance with the prescriptions of BS EN 12467:2004, Category A, Class 2.

Manufacture

Weatherboard is an autoclaved fibre cement plank manufactured from a mixture of cement, organic fillers and water.

Availability

In order to give the best possible service, the most popular colours are kept in stock. Other colours are available on longer lead times.

Dimensions

Length	3600mm
Width	190mm
Thickness	10mm
Weight/board	9.9kg

Properties (air dry)

Installed weight	17.1kg/m^2
Density	1300kg/m^3
Bending strength:	
Longitudinal	23N/mm^2
Transverse	11N/mm^2
Modulus of elasticity:	
Longitudinal	7500N/mm^2
Transverse	5500N/mm^2
Expansion from dry air to saturated	1.75mm/m
Thermal conductivity	0.21W/mK
Reaction to fire:	
Building Regulations	Class 0
EN 13501-1	A2-s1-d0

Operal and Cedral colour range

Operal only

Operal is available in the colours shown, except the Woodstain range, but with a flat, lightly textured surface.

Cedral only

Additional colours

Any factory approved BS colour can be supplied subject to minimum quantities.

Finishing

Weatherboard can be specified unpainted (Colour code C00 Natural) and finished on site using the appropriate product to achieve the intended look.

Opaque matt finish. Good quality exterior water based acrylic paint (Sadolin Superdec or Dulux Weathershield masonry paint). No primer necessary.

Gloss finish. Seal with an oil based alkaline-resistant primer followed by two coats of good quality external paint (undercoat and gloss).

Translucent finish. Use water based woodstain. (i.e. Sikkens Cetol BL21 Plus).

Normal timber dyes or preservative treatments are not suitable.

Minimum order quantity

This product is sold in pallet quantities only:

Natural – 102 planks per pallet
Standard colours – 144 planks per pallet
Woodstain and bespoke colours – 72 planks per pallet (subject to availability and price surcharge)

Eterspan fibre cement corners

Available in all standard and bespoke colours.

Metal corners

Available as standard in white only.



White (Nearest RAL 9016: Traffic White)



Cream White (Nearest RAL 9001: Cream)



Beige (Nearest RAL 1015: Light Ivory)



Sand Yellow (Nearest RAL 1014: Ivory)



Grey Brown (Nearest RAL 1019: Grey Beige)



Ochre (Nearest RAL 1000: Green Beige)



Dark Brown (Nearest RAL 8019: Grey Brown)



Blue Grey (Nearest RAL 7001: Silver Grey)



Grey (Nearest RAL 7047: Telegrey)



Beige Yellow (Nearest RAL 1001: Beige)



Grey Green



Lavender Blue (Nearest RAL 5014: Pigeon Blue)



Lilac Blue



Oriental Green



Red (Nearest RAL 3009: Oxide Red)



Atlas Brown



Brown (Nearest RAL 8024: Beige Brown)

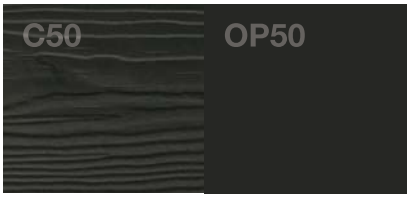

Black (Nearest RAL 9017: Traffic Black)



Dark Grey (Nearest RAL 7046: Telegrey)



Pine Green (Nearest RAL 6009: Fir Green)



Cevennes Green



Orange Brown (Nearest RAL 8023: Orange Brown)

Woodstain colours (Cedral only)


MW01 Pine


MW02 Light Oak


MW03 Cedar


MW04 Dark Oak

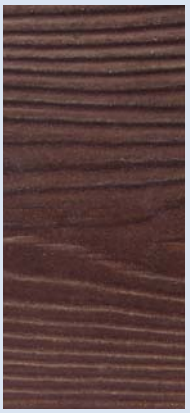
MW05 Walnut


MW06 Ebony

Operal detailing

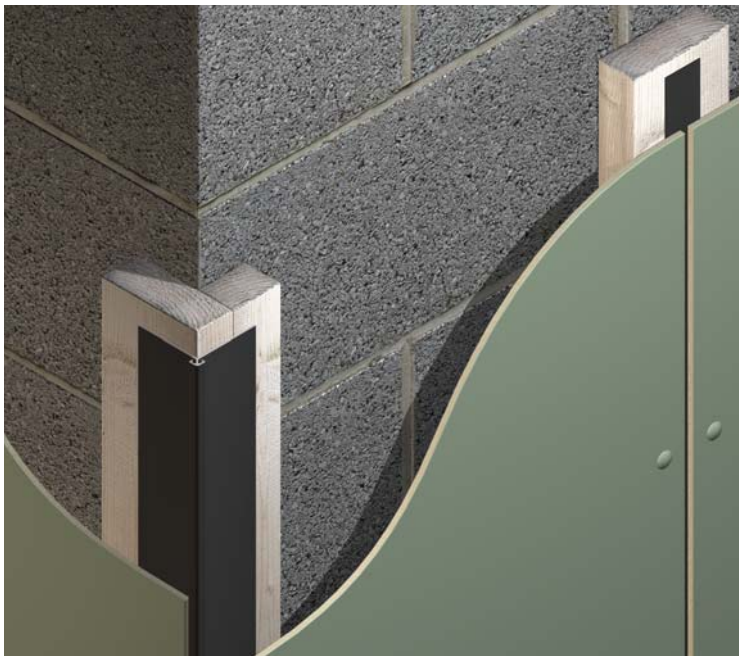

Fixing overview

For facade applications, Operal can be nailed or screwed to vertical timber battens using the rainscreen construction principle.

For small applications (e.g. fascias, soffits) the board can be installed with 3mm joints, but where large boards are being used, alignment is easier if an 8mm joint is maintained.

Timber protection

Timber battens can be protected against decay and insect attack in accordance with BS 5268: Part 5.

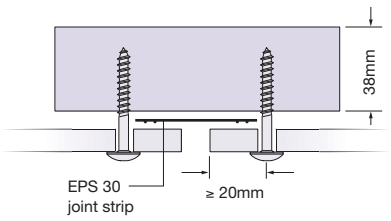

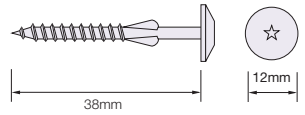

Operal colour matched screw

Horizontal joint alternatives

Horizontal joints may be formed using Marley Eternit horizontal joint profiles Type HJP. Alternatively, an open joint detail may be used.

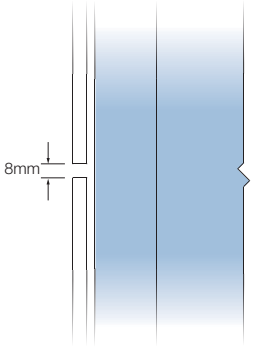

Horizontal open joint

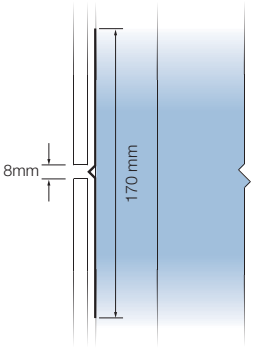

Horizontal joint profile type HJP

Vertical joint and intermediate panel fixing

Marley Eternit supply black flexible jointing strips to protect and close vertical joints.

EFPS 36mm – standard panel joints

EFPS 60mm – corner joints

Note: To ensure an even surface, an EFPS 36 strip should be placed behind intermediate panel fixing.

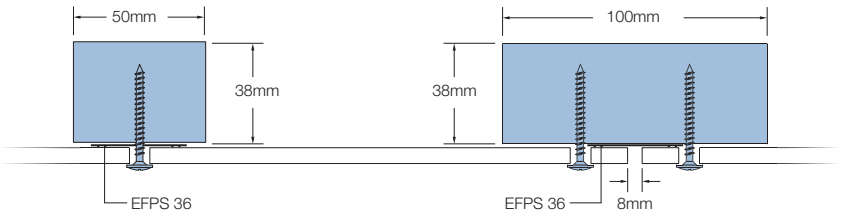

Corners

Corners are created using flat sheets and the appropriate jointing strips and corner profiles.

Universal corner profiles

These are supplied black or mill finished as standard. Dimension 10.5mm.

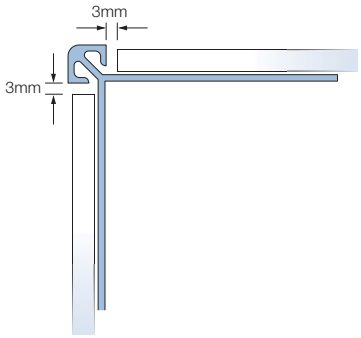

External corner

Universal corner profile – UCP

For good site practice it is necessary to vary the position of screw fixings to ensure that adequate penetration occurs. The example below illustrates a batten configuration employing 38mm deep battens and the respective screw positions

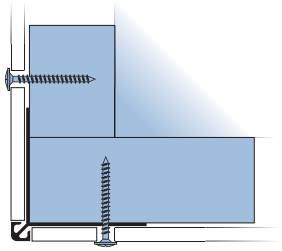

Open joint – internal

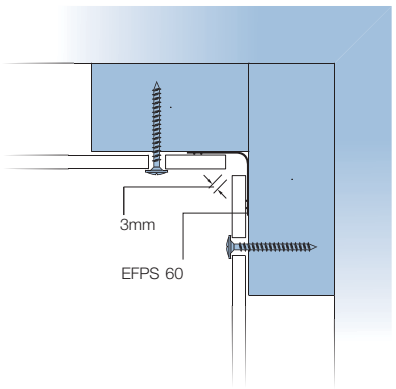

Open joint – external

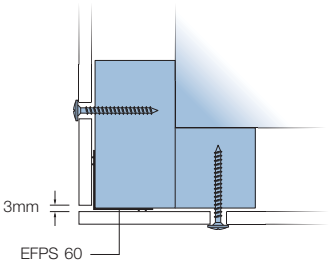

Operal detailing

Base of cladding

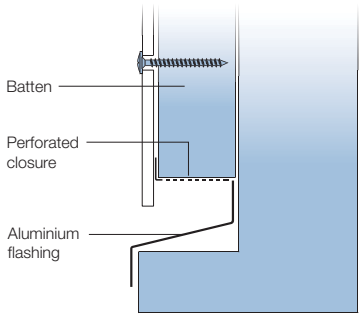

Top of cladding

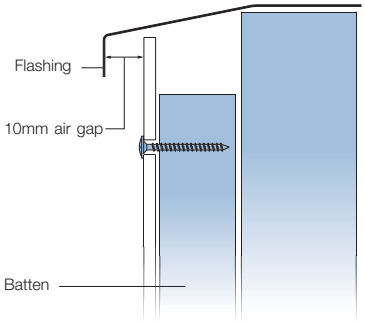

Brickwork abutment

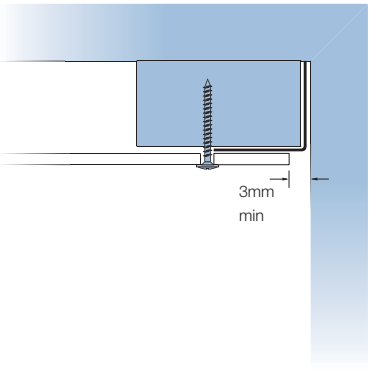

Typical window detail

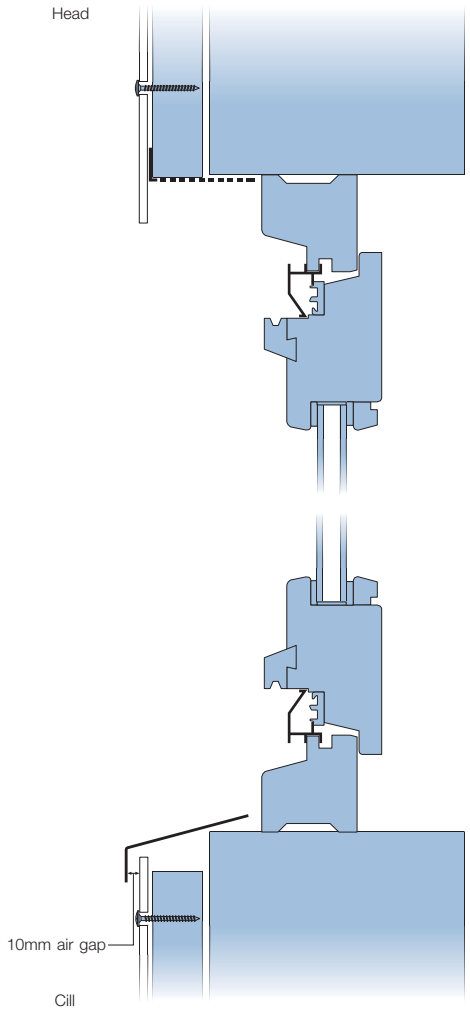

Jamb

For all jambs in excess of 100mm, additional fixings are required.

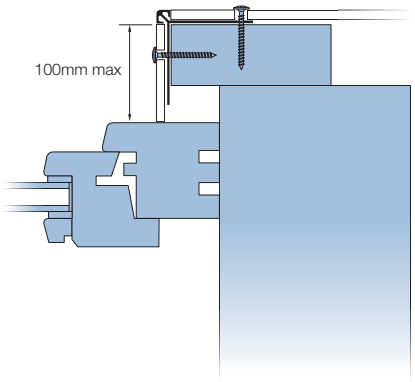

Batten sizing

Screws

Panel joints min 100 x 38mm
Intermediate min 50 x 38mm

Larger battens are required if fixings are more than 25mm from the vertical edge.

High wind loadings or exceptional impact requirements

Should wind loading exceed ± 1.5 kN/m², please consult the Technical Advisory Service. Where exceptional impact levels to cladding panels can be anticipated, i.e. low level applications near pedestrian access, schools, leisure facilities etc., additional timber battens, between the fixing batten, can be incorporated to increase the panel's resistance.

Screw holes

The pre-drilled hole dimensions for the panels should be 4mm. However, the Operal screw will cut its own hole.

Surface mounted features

Where other building features, i.e. signs, gutters, canopies etc. are to be fixed then additional batten work should be included and clearance holes must be provided through the cladding. Under no circumstances should cladding panels receive any additional structural loads.

Fixing centres

Dimensions mm	screw fixing	nail fixing
A	20	20
B	50	50
C	600	600
D	600	400
Maximum distance between battens		600mm
Minimum size of battens:		
at the vertical joint		100 x 38mm
at the central support		50 x 38mm

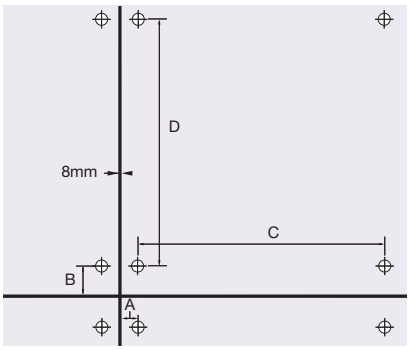

Maximum centres for 1.5 kN/m² windload.

Cedral Weatherboard detailing

Fixing

Weatherboard is fixed to timber battens in a 'ship lap' configuration using nails or screws.

It is fixed in the same way as timber weatherboarding.

Fixings to be positioned 20mm from the top edge of the plank.

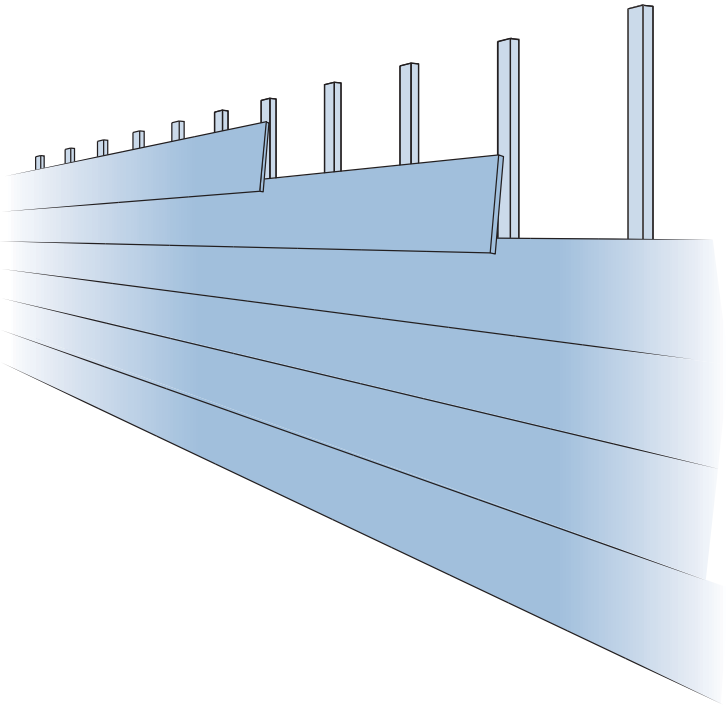

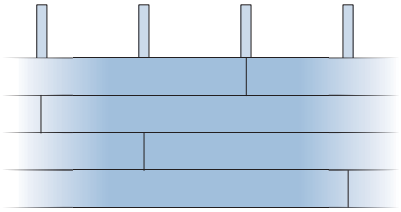

Joint detail

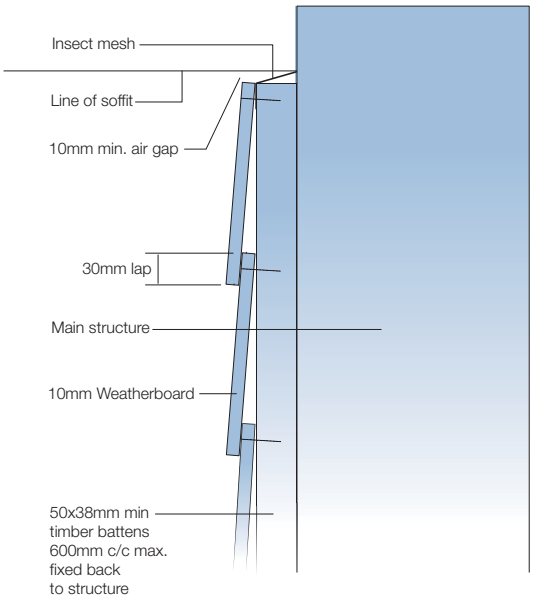

Soffit detail

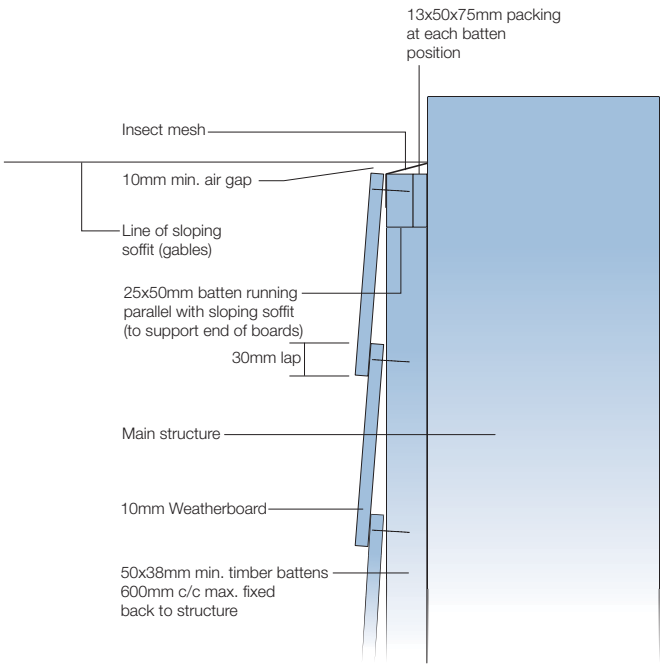

Sloping soffit detail

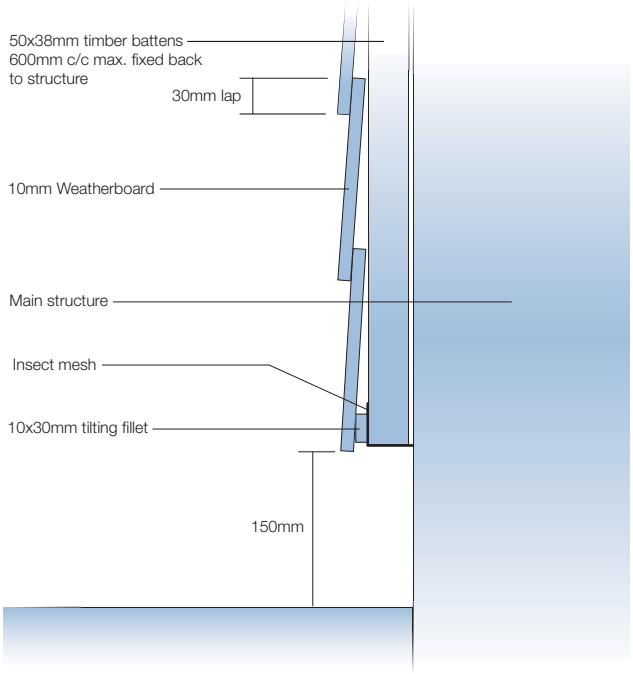

Base detail

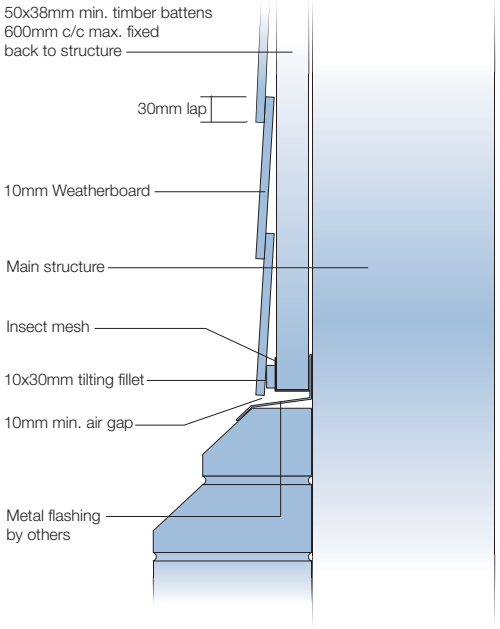

Plinth detail

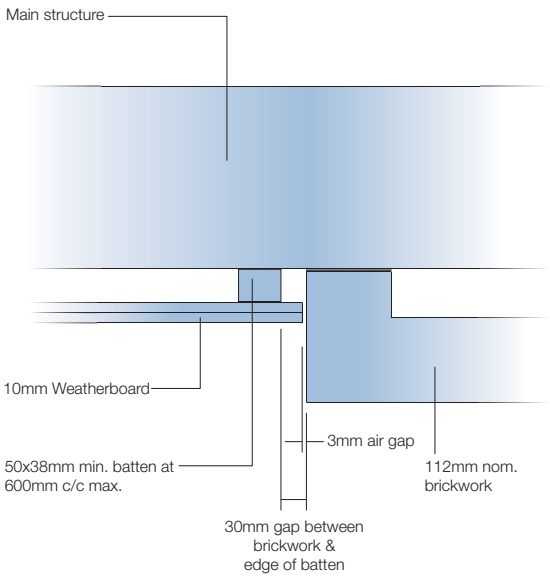

Cedral Weatherboard detailing

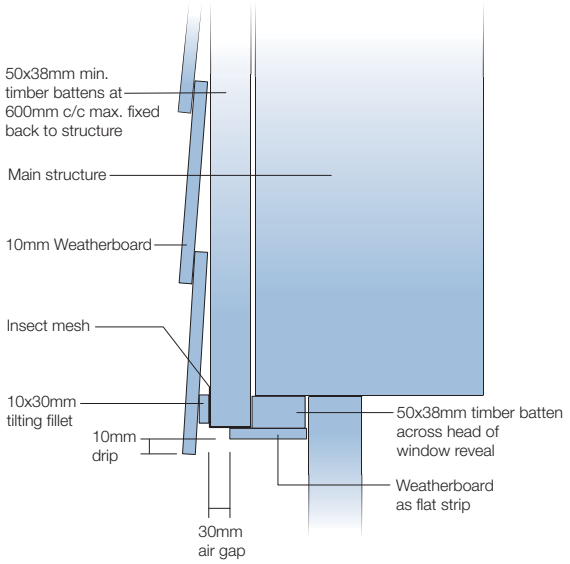

Window head detail

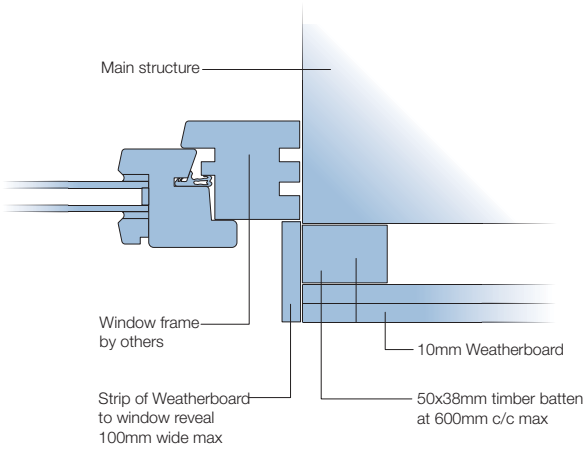

Window jamb detail

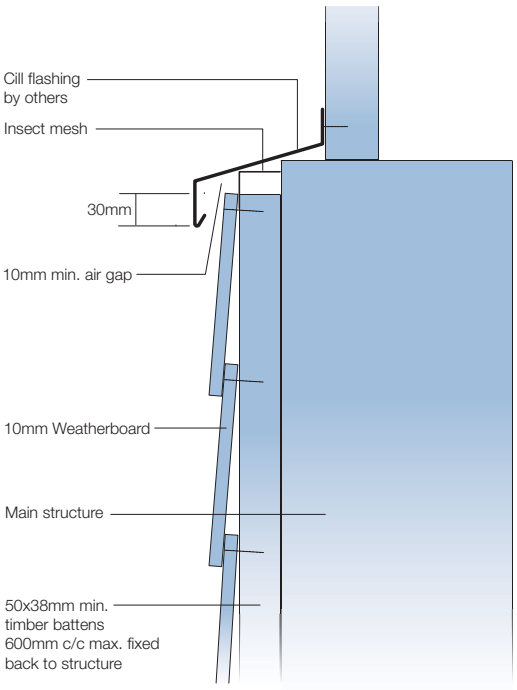

Window cill detail

Corners

There are two corner detailing options:

1. Eterspan fibre cement corners
75x25x3000mm
100x25x3000mm

2. Metal (internal and external).
30x30x2500mm

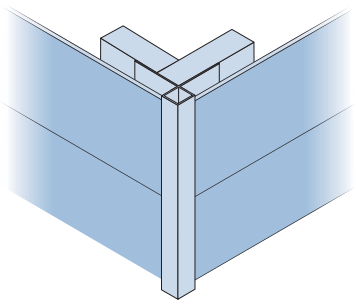

Typical metal detail

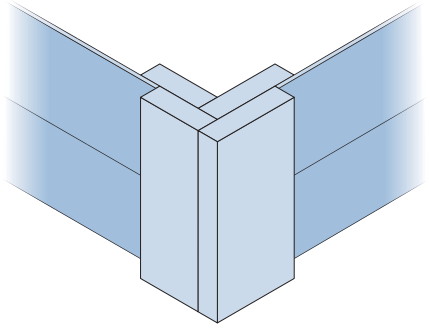

Typical fibre cement corner detail

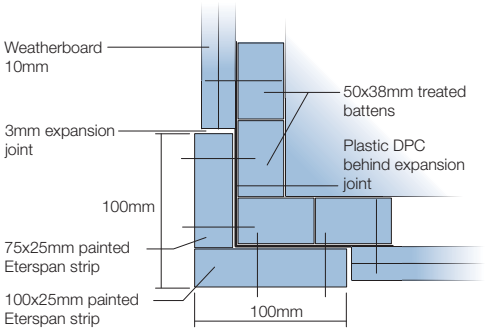

Eterspan external corner detail

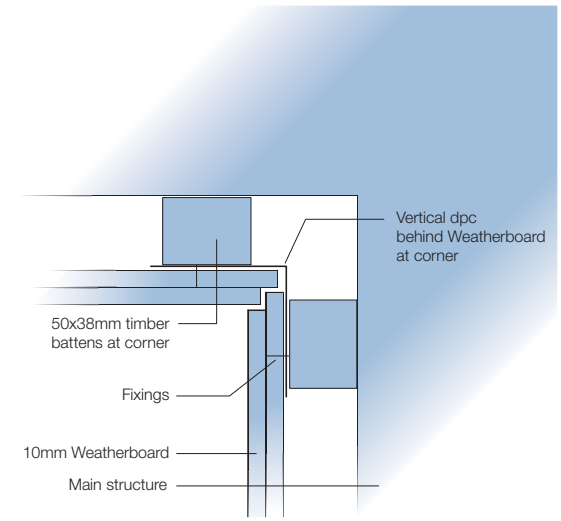

Internal corner detail

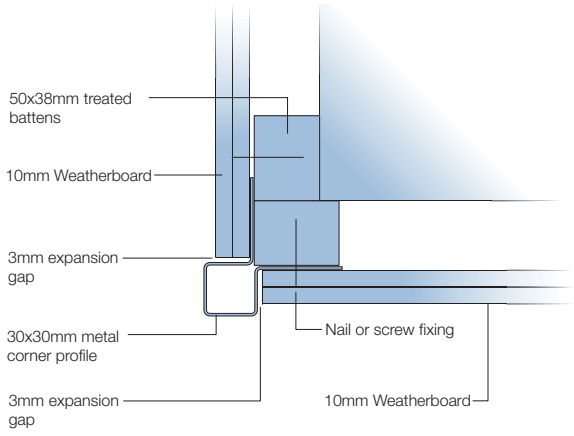

Metal external corner detail

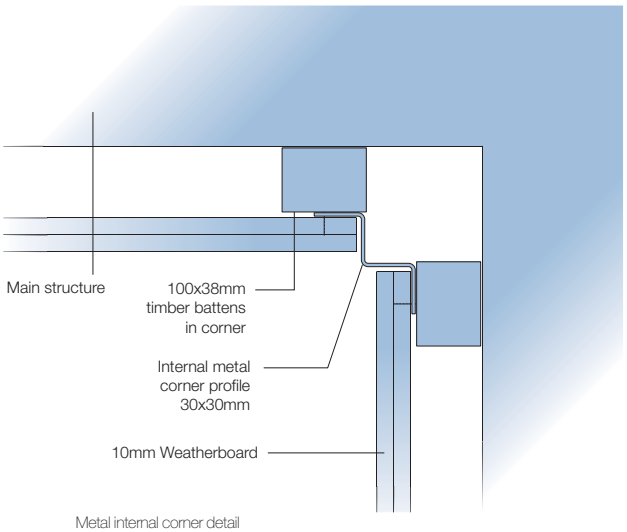

Metal internal corner detail

Cedral Weatherboard fixing information

Cutting and handling

- Use either a fine tooth hand saw or a power saw. Make sure the blade is tungsten carbide tipped or diamond dusted.
- Always support both ends of the board during cutting, to avoid breakaway.
- If using a power tool, wear safety glasses and an approved dust mask or respirator.

Fixings

Recommended nails:
stainless steel ring shank 2.8x50mm with 7-10mm dia. head.

Stainless steel screws:
minimum 4.5x50mm

Fixing distance from edges:
Vertical edges 15mm
Horizontal edges 20mm

Corners and trims

For the neatest detail at corners, Weatherboard can be close mitred. Alternatively, they can be finished using either fibre cement two-piece corner trims. Other metal or plastic trims, or wooden corner posts can also be used.

Start installation with inside and outside corner trim pieces. Length of trim should extend full height of cladding. Starting at a corner or butt joint, fasten Weatherboard from one end to the other, not from the centre outward.

Preparation

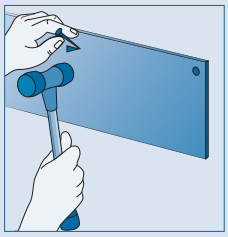
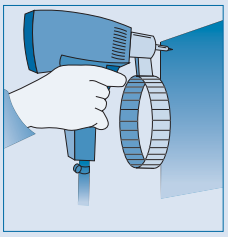
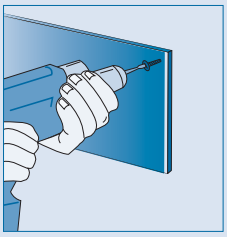
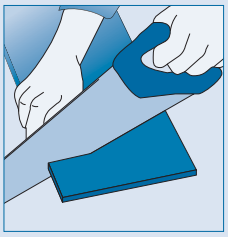
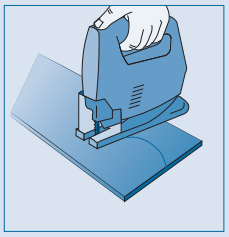

- Ensure a straight, flat wall surface.
- Use a secure framing system, which meets all relevant Building Regulations. We advise you to nail or screw the Weatherboards to vertical battens. These should be at least 50mm wide, spaced at a maximum 600mm intervals.
- Install a 30x10mm tilting fillet at the bottom of the vertical battens allowing at least 150mm between the bottom edge and ground level.
- Apply the first row horizontally. The bottom edge of the first course should overlap the bottom edge of the tilting fillet by at least 3mm.
- Level the first plank and then fasten with screws or nails. Space these at 20mm from the top of the board.
- Overlap successive courses by 30mm. Ends of planks are butt jointed without overlap.
- Fix each board to at least 3 battens. If fixing to only 2 support points, reduce the spacing limit to 400mm.

Storage and handling

Care should be taken at all times when handling Weatherboard on the flat as it can break. While Weatherboard is stored on the flat, it should be fully supported along its full length on purpose-designed pallets. Manual handling is best carried out with the boards carried on their sides. When a single person is carrying a board, it should be turned on to its side before being lifted off the stack, and then the handler must keep their hands as far apart as possible to provide maximum support for the board.

Weatherboard should be stored on the pallets on which they are supplied and preferably inside. The temporary transportation hoods should be removed to release any trapped moisture and the pack recovered with an opaque tarpaulin.

The boards should be protected from mud staining.

Efflorescence

Efflorescence, or lime bloom, is an occasional phenomenon that affects all cement-based products. It is temporary and in no way detrimental to the performance of the product.

The duration of the efflorescence depends on the quality and type of deposit and on prevailing conditions. Water, the element that is initially responsible for its appearance, is also largely responsible for its disappearance. Rainwater, being slightly acidic, not only dissolves the deposit, but also mechanically removes it. Although it is impossible to state exactly how long efflorescence will remain, a period of suitably bad weather is usually sufficient to restore the Weatherboard to an even appearance.

Services & support





Technical Advisory Service

Specifiers require prompt, knowledgeable and detailed responses to a vast range of enquiries.

Our Technical Advisory Service is staffed by a qualified team with specialist knowledge not only of all Marley Eternit products, but also crucially, how those systems integrate with other components and comply with Building Regulations, Health and Safety, environmental and other critical criteria.

Other services

Customer services

Marley Eternit is committed to providing outstanding customer care and is staffed by experienced personnel.

Our nationwide external sales team are not only flexible enough to visit office or site, but have a thorough understanding of all our products and the ability to impart this knowledge to you quickly and simply.

Samples and literature can be sent to you by courier, or, if you prefer a sales person to call, this can be arranged to suit your schedule.

Training centre

We have a purpose-built training centre where we are able to impart our expertise and demonstrate our ongoing commitment to training within our industry

CPD services

Marley Eternit offer RIBA accredited CPD services which can be presented to you or your offices on request.

www.marleyeternit.co.uk

Specifying the correct cladding system is a fundamental consideration of any building project.

To ease this process, the Marley Eternit website has been designed as a comprehensive and easy-to-use resource for the visitor. It is flexible and easily navigable ensuring simple selection of our products to satisfy project needs. Amongst many other features, it has the facility to download literature, CAD details and request samples.

Site features

- Comprehensive product data
- Product selector – a tool to help selection of the right product
- Case studies – a searchable database of completed projects
- Downloadable literature
- Request samples and printed literature
- Press releases and industry news.

Reference to specific relevant areas of our website are shown throughout this book.

CAD details

Access to CAD drawings illustrating how specific cladding details can be formed.

→ More

contact Tel 01283 722588
E-mail cladding@marleyeternit.co.uk

web marleyeternit.co.uk

Customer Services
Tel 01283 722588 **Fax** 01283 722219 **E-mail** cladding@marleyeternit.co.uk
www.marleyeternit.co.uk

Marley Eternit Limited, Lichfield Road, Branston, Burton on Trent DE14 3HD
an Etex GROUP company

The exact photographic reproduction of product colours is limited by the lithographic print process