BOROUGH OF WORTHING
DEPOSITED 13/2/09
TP REF No.
WBC 08/1213/FULL

CI/SfB 81

BBA BRITISH BOARD OF AGRÉMENT
TECHNICAL APPROVALS FOR CONSTRUCTION

Designated by Government to issue European Technical Approvals

Portakabin Ltd
York YO32 9PT
Tel: 01904 611655 Fax: 01904 611644
e-mail: solutions@portakabin.com
website: www.portakabin.com

Building System Agrément Certificate No 02/S030

T.P. OFFICE COPY

ULTIMA BUILDING SYSTEM

Système pour constructions
Bausystem

Product



- *THIS CERTIFICATE REPLACES CERTIFICATE No 94/S022 AND RELATES TO THE ULTIMA BUILDING SYSTEM.*
- *The system is for use as single-, two-, three- or four-storey educational, office, institutional, residential and non-residential accommodation other than dwellings.*
- *The steel structure has a minimum life of 60 years.*
- *The design life of the external envelope and internal finishes is between 25 and 60 years.*

continued

Regulations

1 The Building Regulations 2000 (as amended) (England and Wales)

The Secretary of State has agreed with the British Board of Agrément the aspects of performance to be used by the BBA in assessing the compliance of building systems with the Building Regulations. In the opinion of the BBA, buildings constructed using the Ultima Building System, if used in accordance with the provisions of this Certificate, will meet the relevant requirements.

Requirement:	A1	Loading
Comment:		The buildings will have adequate strength and stability. See sections 8.1 to 8.11 of this Certificate.
Requirement:	B2	Internal fire spread (linings)
Requirement:	B3	Internal fire spread (structure)
Requirement:	B4	External fire spread
Comment:		The buildings will meet the relevant requirements within the limitations set out in this Certificate. See sections 9.1 and 9.3 to 9.5 of this Certificate.
Requirement:	C4	Resistance to weather and ground moisture
Comment:		The buildings are acceptable.
Requirement:	L2(a)	Conservation of fuel and power — Buildings or parts of buildings other than dwellings
Comment:		The buildings are acceptable. See sections 10.2 to 10.4 of this Certificate.
Requirement:	Regulation 7	Materials and workmanship
Comment:		The buildings are acceptable. See section 16.1 of this Certificate.

continued

- *The standard range of building sizes and configurations covered by the scope of this Certificate have been assessed for structural stability up to three storeys and do not require any additional analysis or approval by a consultant engineer.*
- *The Ultima Building System can be used to construct buildings with a variety of individual treatments and plan forms.*
- *Specifiers shall ensure plan form, internal subdivision, siting of the buildings, access for the disabled, access for fire services, and means of escape in case of fire, comply with the relevant Building Regulations' requirements.*
- *This assessment does not cover staircases, windows, doorsets, fittings and raised access floors or the adequacy of the plumbing, drainage and electrical services supplied with the buildings or the ventilation of bathrooms and rooms containing sanitary conveniences, which will vary according to use.*

2 The Building Standards (Scotland) Regulations 1990 (as amended)



In the opinion of the BBA, the buildings described in this Certificate are capable of satisfying the Building Standards (Scotland) Regulations 1990 (as amended) with regard to the following matters, subject to the qualification contained in this Certificate.

Regulation:	**10**	Fitness of materials and workmanship
Standards:	B2.1 and B2.2	Selection and use of materials, fittings, and components, and workmanship
Comment:		The buildings are acceptable. See section 16.1 of this Certificate.
Regulation:	**11**	Structure
Standard:	C2.1	Stability
Comment:		The buildings will have adequate strength and stability. See sections 8.1 to 8.11 of this Certificate.
Regulation:	**12**	Structural fire precautions
Standard:	D2.1	Structural protection — Principles
Standard:	D2.3	Structural protection — Non-combustible materials
Standard:	D7.1	Fire spread on internal linings — Principles
Standard:	D8.1	Fire spread to adjoining buildings — Principles
Standard:	D9.1	Fire spread from an adjoining building
Standard:	D10.1	Fire spread on an external wall
Comment:		The buildings will meet the relevant Standards within the limitations set out in this Certificate. See sections 9.2 to 9.4 and 9.6 of this Certificate.
Regulation:	**17**	Resistance to moisture
Standard:	G2.6	Resistance to moisture from the ground
Standard:	G3.1	Resistance to precipitation
Comment:		The buildings are acceptable.
Regulation:	**22**	Conservation of fuel and power
Standard:	J8.7	Carbon emissions calculation method
Standard:	J9.1	Limiting thermal bridging at junctions and around openings
Standard:	J10	Limiting infiltration
Comment:		The buildings can satisfy these Standards. See sections 10.2 to 10.4 of this Certificate.

3 The Building Regulations (Northern Ireland) 2000



In the opinion of the BBA, the buildings described in this Certificate are capable of satisfying the Building Regulations (Northern Ireland) 2000 with regard to the following matters, subject to the qualifications contained in this Certificate.

Regulation:	**B2**	Fitness of materials and workmanship
Comment:		The buildings are acceptable. See section 16.1 of this Certificate.
Regulation:	**C4**	Resistance to ground moisture and weather
Comment:		The buildings are acceptable.
Regulation:	**D1**	Stability
Comment:		The buildings will have adequate strength and stability. See sections 8.1 to 8.11 of this Certificate.
Regulation:	**E3**	Internal fire spread — Linings
Regulation:	**E4**	Internal fire spread — Structure
Regulation:	**E5**	External fire spread
Comment:		The buildings will meet the relevant Regulations within the limitations set out in this Certificate. See sections 9.1 and 9.3 to 9.5 of this Certificate.
Regulation:	**F2**	Conservation of fuel and power — Building fabric
Comment:		The buildings are acceptable. See sections 10.2 to 10.4 of this Certificate.

4 Construction (Design and Management) Regulations 1994 (as amended)
Construction (Design and Management) Regulations (Northern Ireland) 1995 (as amended)

Information in this Certificate may assist the client, planning supervisor, designer and contractors to address their obligations under these Regulations.

See sections: *7 Delivery and site handling*, 20 *Procedure* and 21 *Supervision*.

Technical Specification

5 Description

General

5.1 This Certificate relates only to the form of construction described below and the Ultima Building Module Technical Specification approved by the BBA, when applied to single-, two-, three- or four-storey buildings. Both parties maintain and update this specification.

5.2 The Ultima Building System is based on a module consisting of a structural steel framework and composite roof and end wall panels. The modules are used to construct single-, two-, three- or four-storey buildings incorporating walls to suit their location in the building (see Figure 1).

Figure 1 Typical Ultima building

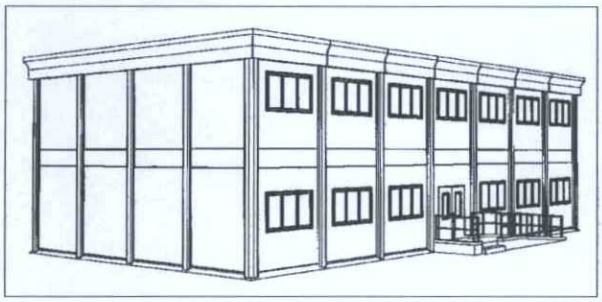

5.3 The modules are available in the standard range of sizes given in Table 1.

Table 1 Size range[1]

Type	Internal length (m)	Internal width (m)	Internal height (m)
7	7.049	2.9, 3.3, 3.8	2.4, 2.6, 2.8, 3.2
9	9.451	2.9, 3.3, 3.8	2.4, 2.6, 2.8, 3.2
12	11.853	2.9, 3.3, 3.8	2.4, 2.6, 2.8, 3.2
14	14.255	2.9, 3.3, 3.8	2.4, 2.6, 2.8, 3.2

(1) Longer and wider modules are available but are not covered by this Certificate.

5.4 The full specification and drawings for the materials and components covered by this Certificate have been examined and are retained by the BBA. This section gives only general details of the system. Typical details are shown in Figures 2 to 8.

Structural frame

5.5 The galvanized steel frame for each module comprises four structural steel hollow-section columns, one at each corner of the module, bolted to cold-formed galvanized steel side beams at floor and roof level. Cold-formed galvanized steel floor joists span each module from side to side and are bolted to the two floor side beams. Longitudinal timber-floor runners are screwed to the steel floor joists to assist in the transportation of the module.

Figure 2 Details in plan

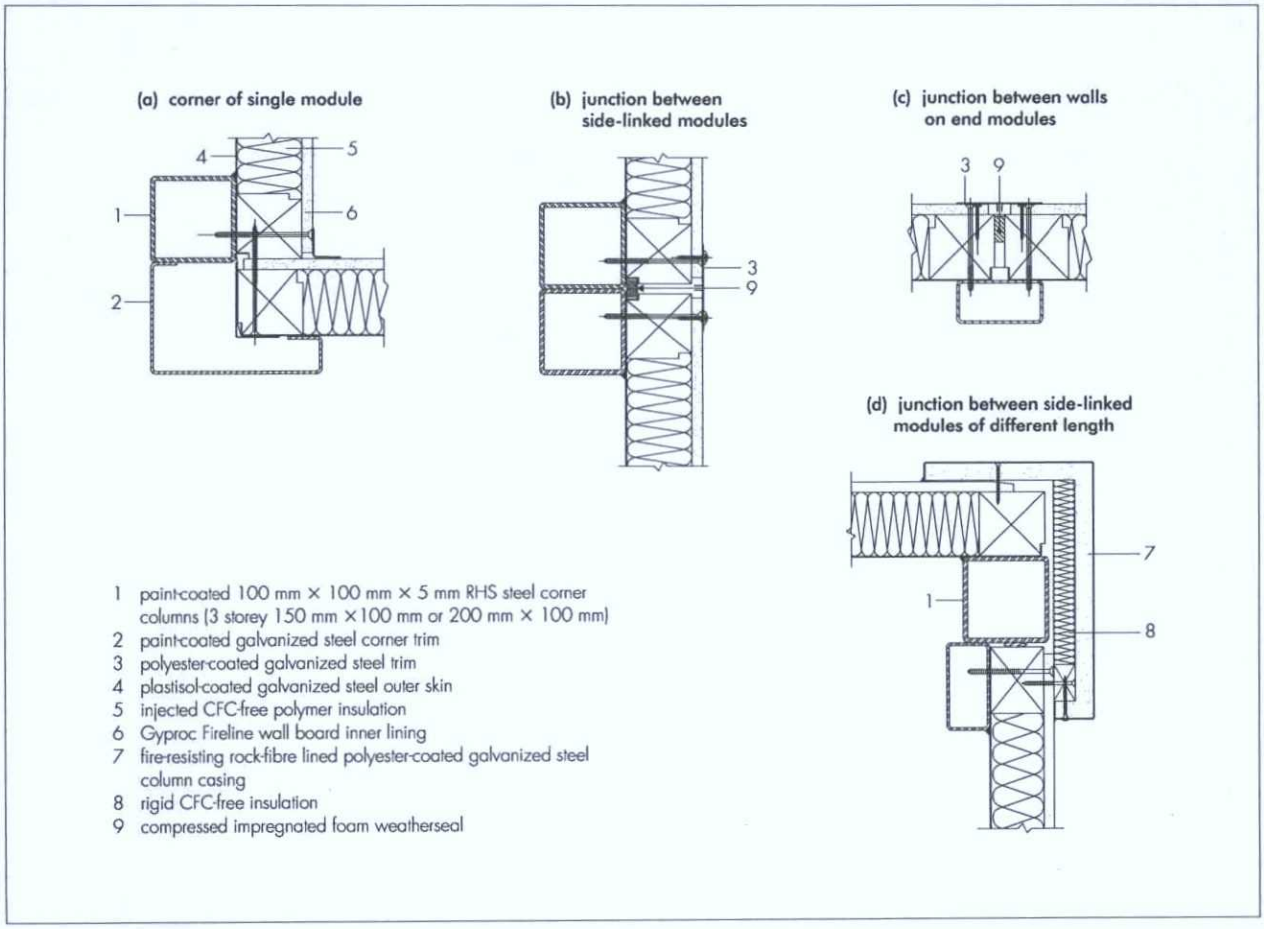

1 paint-coated 100 mm × 100 mm × 5 mm RHS steel corner columns (3 storey 150 mm × 100 mm or 200 mm × 100 mm)
2 paint-coated galvanized steel corner trim
3 polyester-coated galvanized steel trim
4 plastisol-coated galvanized steel outer skin
5 injected CFC-free polymer insulation
6 Gyproc Fireline wall board inner lining
7 fire-resisting rock-fibre lined polyester-coated galvanized steel column casing
8 rigid CFC-free insulation
9 compressed impregnated foam weatherseal

Figure 3 Long wall section

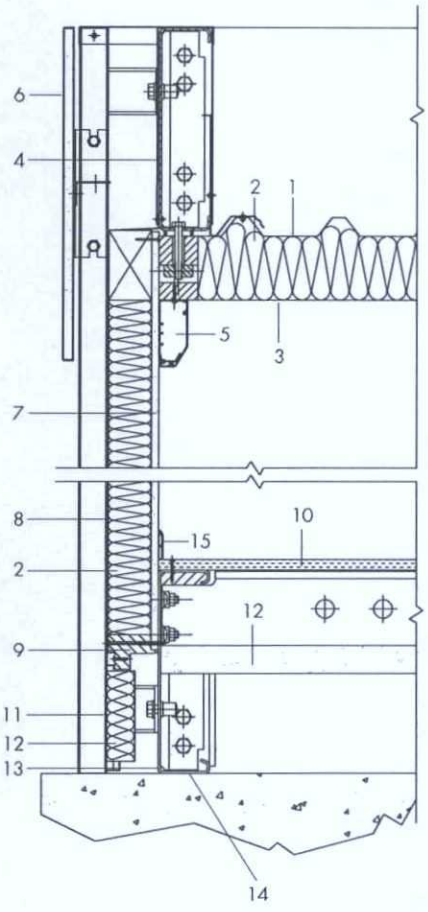

1 profiled plastisol-coated aluminium-zinc steel outer skin
2 injected CFC-free polymer insulation
3 polyester-coated galvanized steel inner lining
4 plastisol-coated galvanized steel beam cover trim
5 PVC trunking
6 composite fascia panel
7 12.5 mm Gyproc Fireline wall board inner lining
8 plastisol-coated galvanized steel outer skin
9 impact-resistant polystyrene bottom rail
10 moisture-resistant structural particle board floor deck
11 plastisol-coated galvanized steel skirt
12 HCFC-free rigid urethane insulation board
13 cold-formed galvanized steel channel floor beam
14 polyethylene damp-proof course
15 PVC skirting

Figure 4 Short wall section

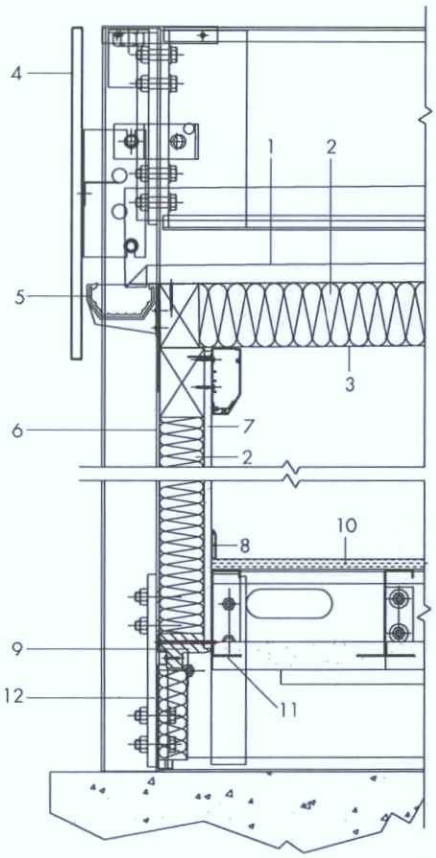

1 profiled plastisol-coated aluminium-zinc steel outer skin
2 injected CFC-free polymer insulation
3 polyester-coated galvanized steel inner lining
4 composite fascia panel
5 PVC gutter and downpipe
6 plastisol-coated galvanized steel outer skin
7 12.5 mm Gyproc Fireline wall board inner lining
8 PVC skirting
9 impact-resistant polystyrene bottom rail
10 moisture-resistant structural particle board floor deck
11 cold-formed galvanized steel channel floor end joist
12 plastisol-coated galvanized steel skirt

5.6 Each column has an integral lifting point within the top to accept a lifting eyebolt enabling the complete module to be crane handled. Upper floor modules have an integral locating socket within the bottom of the columns which is used to aid module alignment when linking them to lower modules.

Floors

5.7 Floors comprise 18 mm thick, moisture-resistant structural particle board type P5 to BS EN 312-1 : 1997 and BS EN 312-5 : 1997 fixed to the galvanized steel joists with adhesive and zinc-plated screws. The floor is completely underdrawn and insulated with rigid, HCFC-free, urethane foam boards with foil facings on both sides.

External walls

5.8 External walls are of composite construction having an external skin of Colorcoat HP 200 plastisol-coated galvanized steel sheet (the subject of a BBA Certificate), timber top and end posts, rigid polymer intermediate studs, impact-resistant polystyrene bottom rail and an internal lining of 12.5 mm thick Gyproc Fireline vapourcheck board. The void between the external skin and internal lining is filled with injected, CFC-free polymer insulation.

5.9 All walls are fixed to the perimeter of the galvanized steel floor frame with zinc-plated steel screws and, in addition, short walls are also fixed to the steel columns with zinc-plated steel screws.

Figure 5 Section through junction — two modules joined end to end

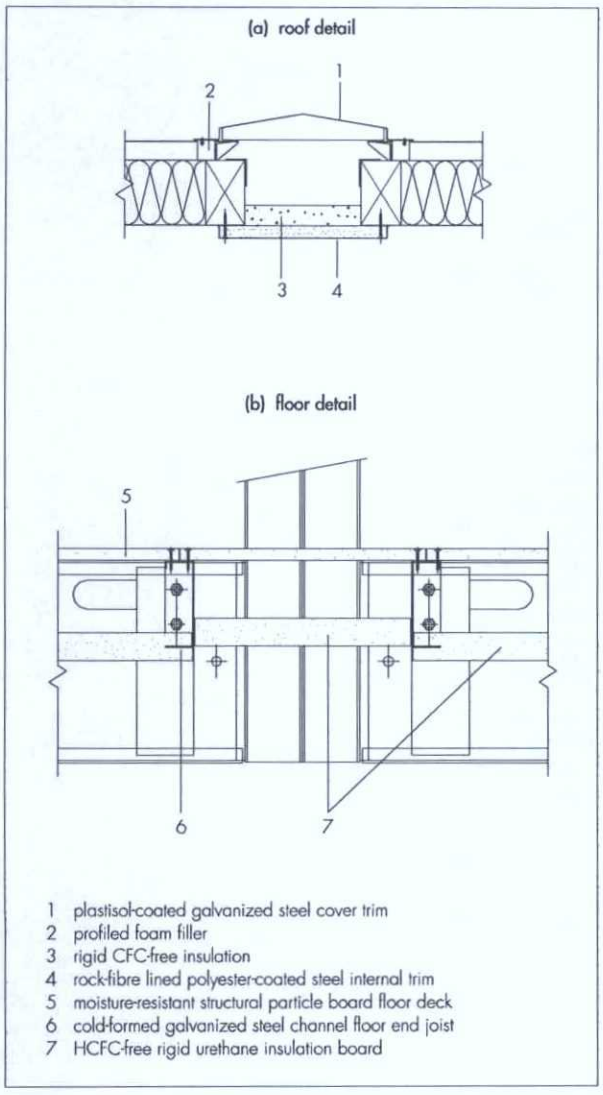

Figure 6 Section through junction — two modules joined side to side

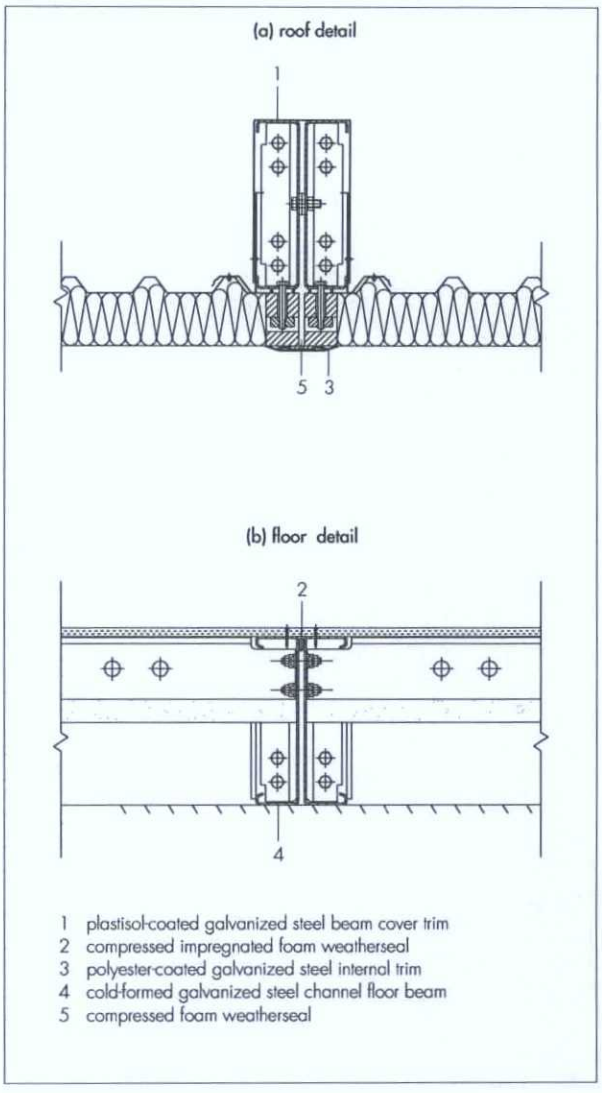

The wall-to-wall corner joints and the wall-to-roof joints are fixed with zinc-plated steel screws.

External roof ceiling panel

5.10 The external roof is of composite construction having an upper profiled (trapezoidal) skin of plastisol-coated aluminium-zinc coated steel sheet, rigid polymer/plywood composite inserts, timber peripheral frame and a ceiling lining of polyester-coated galvanized steel. The void between the upper skin and ceiling lining is filled with injected, CFC-free polymer insulation.

5.11 The external roof is bolted to, and supported by, the two steel roof side beams, so that it has a 1:127 fall along the length of the module.

Intermediate ceiling panels for two, three or four storeys

5.12 The ceiling panel is a composite construction having an upper plywood deck, timber peripheral frame and ceiling lining of polyester-coated galvanized steel. The void between the upper deck and ceiling lining is filled with injected, CFC-free polymer insulation.

5.13 The ceiling panel is bolted to, and supported by, the two steel roof side beams in a horizontal plane.

Protection of steelwork against corrosion

5.14 Floor side beams are produced from 2.5 mm, 3 mm or 4 mm thick galvanized steel sheet to BS EN 10147 : 2000, S350GD + Z600-N-A-C. Roof beams are produced from 2.5 mm, 3 mm, 4 mm, 5 mm and 6 mm thick galvanized steel sheet to BS EN 10147 : 2000, S350GD + Z275-N-A-C. Roof side beams 5 mm or 6 mm thick are finished with zinc chromate paint.

5.15 The floor joists are produced from galvanized steel sheet to BS EN 10147 : 2000, with a Z275 coating.

5.16 The structural steel columns are shot-blasted and coated with two coats of anti-corrosive primer and finished in grey paint.

5.17 The external skin of the building is protected by a 200 µm coating of PVC plastisol applied over a Z275 zinc coating to BS EN 10142 : 2000.

Figure 7 Floor/ceiling assembly — short wall section

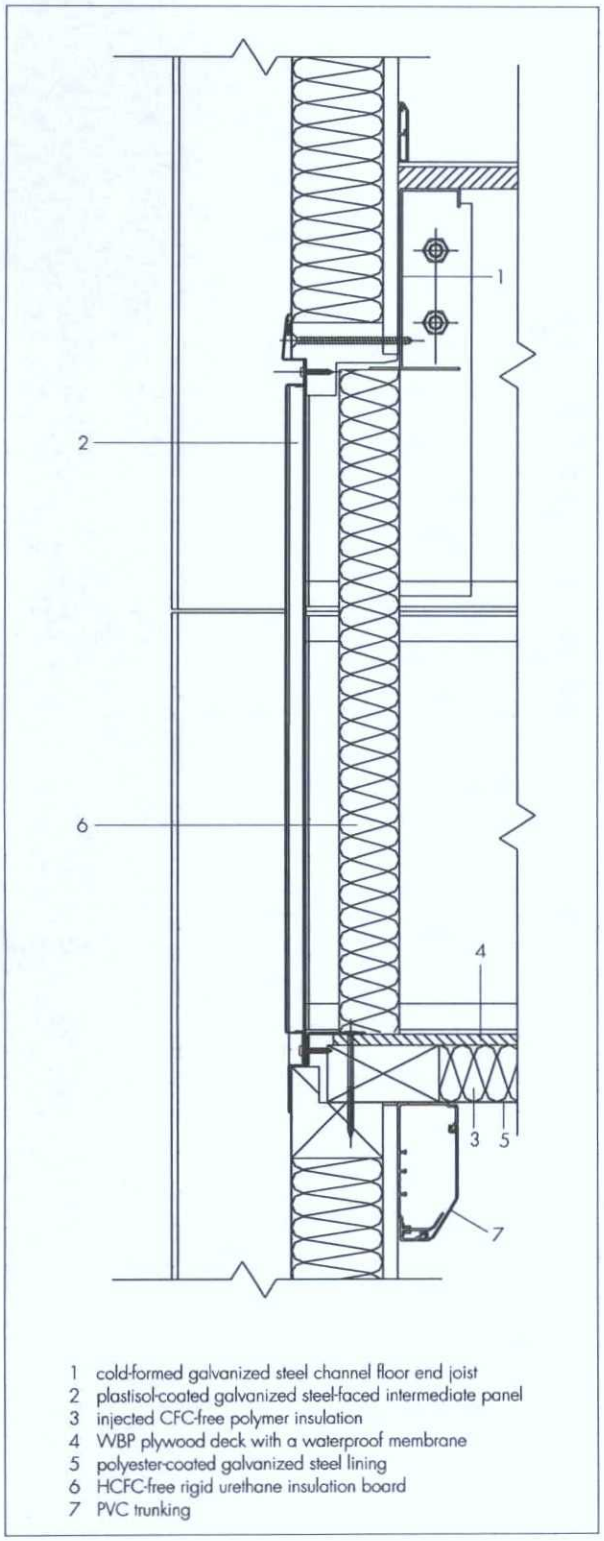

1 cold-formed galvanized steel channel floor end joist
2 plastisol-coated galvanized steel-faced intermediate panel
3 injected CFC-free polymer insulation
4 WBP plywood deck with a waterproof membrane
5 polyester-coated galvanized steel lining
6 HCFC-free rigid urethane insulation board
7 PVC trunking

Figure 8 Floor/ceiling assembly — long wall section

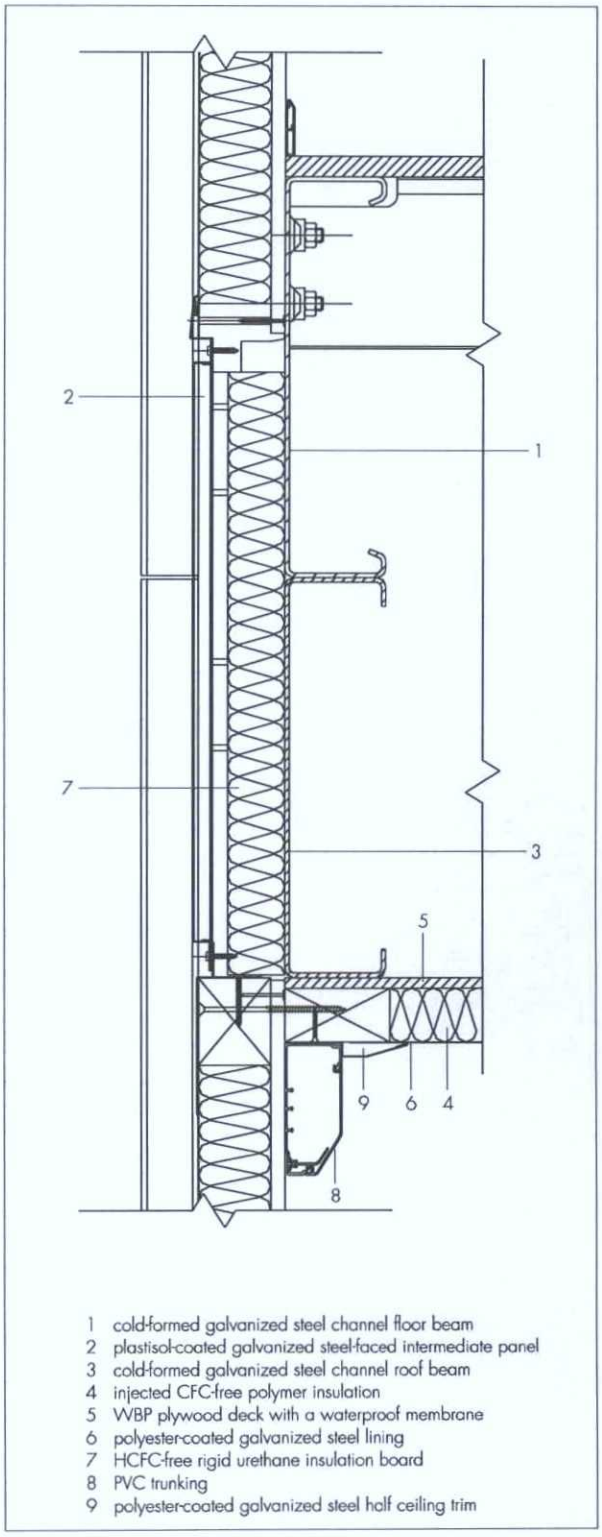

1 cold-formed galvanized steel channel floor beam
2 plastisol-coated galvanized steel-faced intermediate panel
3 cold-formed galvanized steel channel roof beam
4 injected CFC-free polymer insulation
5 WBP plywood deck with a waterproof membrane
6 polyester-coated galvanized steel lining
7 HCFC-free rigid urethane insulation board
8 PVC trunking
9 polyester-coated galvanized steel half ceiling trim

Finishes

5.18 The external faces of wall panels, wall trims and fascias have a goosewing grey plastisol coating, with a leathergrain finish.

5.19 The external face of the roof panel has a white plastisol coating with a Scintilla micro-textured finish.

5.20 Internal walls have a textured dolomite white vinyl covering.

5.21 The ceiling has a silk white polyester finish.

5.22 Fascias, roof flashings and wall trims fabricated from plastisol-coated steel are fitted to the external corners, the perimeter of the roof, the lower perimeter of all modules, the upper perimeter of modules to be used at ground floor in two-, three- or four-storey buildings and the horizontal junction between modules in two-, three- or four-storey buildings. Fascias are factory fitted. Intermediate panels are fitted after site assembly of the modules.

5.23 In applications where water will be present, vinyl floor covering must be used with welded joints, and sealed vertical upstands must be provided at all floor/wall interfaces. The vinyl floor covering is class 33 to BS EN 649 : 1997 or BS EN 651 : 1997 or better.

6 Manufacture

6.1 Bought-in materials and components are to agreed specifications or in accordance with British Standards or Agrément Certificates.

6.2 Steel-framed components of the system are fabricated using conventional metalworking techniques.

6.3 Quality checks are made on the sub-assemblies, such as wall and roof panels and the steel frame, and on the final assembly of the modules. Quality control carried out during manufacture includes checks on dimensions, squareness and welding.

7 Delivery and site handling

7.1 The modules are transported to site on a flat-bed lorry or trailer long enough to fully support the module.

7.2 The modules are unloaded by crane.

7.3 The open sides of the modules are weatherproofed during transit.

7.4 The modules are normally positioned on the day of delivery, thus site storage is not required.

Design Data

8 Strength and stability



8.1 With certain exceptions described in this section, the design of the Ultima Building System is in accordance with:

BS 5950-1 : 2000
BS 5950-5 : 1998
BS 5268-2 : 2002
BS 5268-6.1 : 1996.

8.2 It is designed to support loads evaluated in accordance with:

BS 6399-1 : 1996
BS 6399-2 : 1997
BS 6399-3 : 1988.

8.3 Where required, structural testing has been used to verify the relevant aspects of the design outside the scope of the codes, including resistance of panels to racking, fastening characteristics, interaction of components and effects of thermal cycling.

8.4 The limitations on the number of modules that can be used is detailed in Table 2.

8.5 Two- and three-storey buildings covered by this assessment must be constructed from modules of similar length placed one above the other.

Table 2 Standard range of building sizes and configurations

Module	Span[1]	No of storeys[2]	Basic wind speed[3] (ms^{-1})	Min size of building[4] (No of bays)
7	single	1	24	1
7	double	1	24	2
7	single	2	24	3
7	double	2	24	4
7	single	3	24	4
7	double	3	24	7
9	single	1	24	1
9	double	1	24	2
9	single	2	24	3
9	double	2	24	5
9	single	3	24	5
9	double	3	24	9
12	single	1	24	1
12	double	1	24	2
12	single	2	24	5
12	double	2	24	6
12	single	3	24	6
12	double	3	24	10
14	single	1	24	2
14	double	1	24	2
14	single	2	24	4
14	double	2	24	7
14	single	3	24	7
14	double	3	24	11

(1) Where triple or quadruple module spans are required, reference should be made to Portakabin Ltd.

(2) Where four-storey buildings are required reference should be made to Portakabin Ltd.

(3) As defined in BS 6399-2 : 1997. Single- and two-storey buildings sited in country more than 10 km from sea. Three-storey buildings sited in towns more than 10 km from sea.

(4) Maximum building size can be determined on a project basis by the inclusion of deflection limiting walls.

8.6 Four-storey buildings are available and are assessed individually by Portakabin Ltd. The structural assessment of these buildings is not covered by this Certificate.

8.7 A multi-span layout, within the scope of this Certificate, is limited to four modules only.

8.8 In certain building configurations, the racking resistance of the building is supplemented by internal walls designed generally in accordance with BS 5268-6.1 : 1996. All changes to these internal walls must be agreed by Portakabin Ltd.

8.9 The roof is designed to support a uniformly-distributed imposed load of 0.75 kNm^{-2} or a concentrated load of 0.9 kN, in accordance with BS 6399-3 : 1988, and is therefore acceptable where no access is provided, other than that necessary for cleaning or repair.

8.10 The floor is designed to support a uniformly distributed imposed load of 3 kNm^{-2} or a concentrated load of 4.5 kN, in accordance with BS 6399-1 : 1996, and, therefore, is acceptable, for example, in classrooms and offices for general use. Floors designed to support greater loads are available but are not covered within the scope of this Certificate. Raised access floors have not been assessed and are therefore not covered within the scope of this Certificate.

8.11 Most building configurations require the modules to be bolted to foundations. Stability calculations are available from Portakabin Ltd justifying any requirements for bolting modules to the foundation.

8.12 Foundations must be designed in accordance with BS 8004 : 1986.

9 Behaviour in relation to fire



9.1 Buildings subject to Building Regulations in England and Wales or Northern Ireland must not be erected within one metre of a boundary. Due regard must be taken of all 'unprotected areas'.



9.2 Buildings subject to the Building Standards in Scotland must be sited in accordance with Technical Standard D8.1 for compliance with these Regulations. Due regard must be taken of all 'unprotected areas'.



9.3 It can be shown by tests and assessment that the buildings will meet Building Regulations requirements for fire rating as given in Table 3.

9.4 The various exposed surfaces of the building element are assessed as having the following surface spread of flame ratings[1]:

Class 0 ('low risk' in Scotland)

plastisol coated steel (external wall and roof surfaces)
Gyproc Fireline vapourcheck wallboard (internal wall surface)
polyester ceiling surfaces
mineral fibre tiles (suspended ceiling surface).

Class 1 ('medium risk' in Scotland)

ground-floor insulation underdrawing.

(1) As defined in the national Building Regulations thus:

England and Wales

Approved Document B, Appendix A.

Scotland

Technical Standard D1.3, Table 3.

Northern Ireland

Technical Booklet E.



9.5 The roof is designated AA in accordance with the Building Regulations 2000 (as amended) (England and Wales), Approved Document B, Appendix A, and the Building Regulations (Northern Ireland) 2000 Technical Booklet E.



9.6 The designation of the roof in Scotland must be determined in accordance with the deemed-to-satisfy provisions to Standard D9.1 of the Building Standards (Scotland) Regulations 1990 (as amended).

9.7 Adequate provision must be made for escape in case of fire.

9.8 The regulations dealing with *Fire Spread* (England and Wales) and *Structural Fire Precautions* (Scotland and Northern Ireland) contain limits to the size of compartments in buildings according to the use and, in some cases, height. The BBA and Portakabin Ltd have agreed a list of these limits as they apply to the Ultima Building System.

Table 3 Fire rating

Component	Duration
External walls (from inside)	60 minutes — Integrity
Combined ceiling and floor assembly (from underside)	one hour[1]
Steel column casing	one hour[1]

(1) 'medium duration' in Scotland.

9.9 Where it is necessary for fittings, services or ducts to penetrate part of the fire-resisting construction, the detailing must ensure that the relevant fire resistance is not impaired, particularly in relation to the integrity requirements.

9.10 The behaviour in relation to fire of any intermediate walls or cavity barriers between modules in either the roof and floor voids (other than where these occur at the perimeter of a module), or windows and doors, or internal stairwells, have not been assessed and are therefore outside the scope of this Certificate.

10 Thermal insulation

10.1 The U value (thermal transmittance measured in $Wm^{-2}K^{-1}$) of the building elements (including thermal bridging) can be taken as:

ground floor	0.24[1]
external wall	0.34
flat roof	0.24
windows	2.2 or 2.0

(1) For typical floor dimensions.



10.2 Buildings can meet or satisfy the following provisions:

England and Wales

Approved Document L2, Table 1, Elemental Method.

Scotland

Technical Standard J8.7, Carbon emissions calculation method.

Northern Ireland

Technical Booklet F, Table 1.4, Elemental Method.

10.3 The level of insulation at junctions between elements and around openings in walls will adequately limit the risk of excessive additional heat loss and local condensation problems.

10.4 Tests to CIBSE TM 23 : 2000 *Testing buildings for air leakage*, on a single-storey building with a floor area of 190 m^2 resulted in an air leakage less than 10 $m^3h^{-1}m^{-2}$ at an applied pressure difference of 50 Pa.

11 Condensation

11.1 The buildings are not suitable for use where the internal relative humidity is expected to exceed 70% for any significant length of time since condensation may occur. Assuming normal internal conditions of temperature and humidity, and appropriate ventilation (see section 12.1), it is considered that the amount and duration of any condensation will be insufficient to significantly affect the structural or thermal properties of the building.

11.2 If the floor is penetrated by services, eg soil pipes, the joints between the services and the floor deck and floor insulation must be adequately sealed to prevent the ingress of water and water vapour.

11.3 Equipment producing large quantities of water vapour, for example flueless heaters, must not be used.

11.4 Adequate underfloor ventilation is provided to ensure that any condensation on the steelwork or insulation is effectively dispersed (see section 12.2).

12 Ventilation

12.1 The design of the windows should allow adequate ventilation and is an important factor in reducing the incidence of surface condensation. The windows should be designed so that the amount of openable window ventilation is a minimum of 5% of the floor area or provision of mechanical ventilation considered. Portakabin Ltd should be consulted with regard to the requirements for background ventilation which can be facilitated by the standard window system.

12.2 The void beneath the ground floor must have at least 600 mm^2 of open ventilation area per metre run of external wall.

13 Sound insulation

13.1 Tests and assessments in accordance with BS 2750-3 : 1980 show that the weighted sound reduction index (R_w) of an external wall, with and without a window, was estimated to be 29 dB, and measured to be 31 dB, respectively.

13.2 When tested in accordance with BS 2750-4 : 1980, the mean standardized Level Difference ($D_{nT,w}$) of four floor/ceiling assemblies was measured to be 48 dB. Flanking transmission varies with the layout of the building and will affect this value.

13.3 Impact sound transmission will depend on the resilience of the floor coverings used in the buildings.

14 Weathertightness and damp-proofing

14.1 The steel supporting columns raise the building clear of the ground, giving it an inherent resistance to ground moisture. A damp-proof course to protect the galvanizing is provided where the galvanized steel structure contacts the foundations.

14.2 The ground beneath the building should, as a minimum, be effectively cleared of turf and other vegetable matter at least to a depth sufficient to prevent later growth.

14.3 In preparing the site for erection of the building, adequate drainage must be provided, to prevent water collecting beneath or against the building structure. Flower beds should not be positioned so that loose soil can become banked against the building perimeter.

14.4 The roof and external wall surfaces provide adequate weather resistance. The final weathertightness of the building is dependent upon correct positioning and sealing of the roof beam casings, and the sealing of the horizontal and vertical joint between modules.

14.5 The buildings are provided with suitable rainwater gutters and downpipes.

14.6 The performance of windows and doors is not covered by this Certificate; however, the perimeter joints between windows and doors and the wall panels have been assessed and are adequate to ensure that water penetration will not occur at these positions.

15 Services

Electrical and plumbing services are outside the scope of this Certificate; however, in designing and installing these services, precautions must be taken to avoid the possible risk of long-term damage to the structure or the services by, for example, the ingress of water, water vapour or condensate from cold water service pipes.

16 Durability



16.1 The main structural framework is assessed as capable of achieving a design life of 60 years. Other elements can achieve a design life of between 25 and 60 years depending on the materials, construction and degree of maintenance. Reference may be made to BS 7543 : 1992, or relevant Agrément Certificate in this respect.

16.2 Particular care is required in arrangement for dpcs, integrity of vapour control layers and weathertightness of the building envelope.

16.3 Foot traffic over the roof should be restricted to the purpose of maintenance and suitable precautions taken to avoid the risk of damaging the plastisol coating.

16.4 The plastisol coating and galvanizing will be effective for the building's envisaged life.

16.5 The ceiling covering will remain effective for this period.

16.6 If a suspended ceiling is used, the mineral fibre tiles will be effective for the building's envisaged life, but may require occasional

painting. Care must be taken to ensure that any paint coating maintains the Class 0 surface spread of flame of the tiles.

16.7 The vinyl floor covering may require replacement during the building's envisaged life, depending on the use.

16.8 The sealants used in the construction of the modules in the factory and to seal between modules on site are concealed and are not subject to excessive movement. They should not normally require replacement during the building's envisaged life.

17 Maintenance

17.1 The external wall skin of Colorcoat HP200 requires an occasional washing down with water containing a mild detergent. Where a high aesthetic standard is required, maintenance painting may be required after a period from 10 to 30 years, depending on colour and environmental conditions, using a paint recommended by Portakabin Ltd.

17.2 The ceiling and internal surfaces can be cleaned using water containing a mild detergent. These surfaces can be decorated using a paint recommended by Portakabin Ltd.

17.3 Should it be necessary to replace or repair the vinyl floor covering, all joints must be welded. Any replacement vinyl floor covering must be to an equivalent specification as the original.

17.4 The exposed columns should be repainted in accordance with BS EN ISO 12944-2 : 1998.

17.5 In the event of impact or other damage to an external wall, a replacement plastisol-coated steel panel can be fitted over the original panel by Portakabin Ltd. If necessary, damage to the foam core of the wall can be made good before fitting the replacement panel. This will restore the appearance and ensure that the weathertightness and insulation are unaffected.

17.6 Trims or skirt panels can be readily replaced if necessary.

Installation

18 General

18.1 Buildings must be erected with due regard to any boundary (see sections 9.1 and 9.2).

18.2 Erection is carried out by Portakabin Ltd. The arrangements for erection have been assessed and found to be satisfactory.

19 Preparation

Clients are normally responsible for provision of suitable foundations and services and therefore the following aspects should be subject to supervision and should be checked before the Ultima Building System modules are delivered to site:

(a) setting out and level of foundations

(b) setting out of service connections.

20 Procedure

20.1 The modules are placed by crane by Portakabin Ltd on prepared foundations using purpose-designed lifting points incorporated in the steel frame. Access to the site is required for the crane and this requirement will be agreed with the client.

20.2 Temporary weatherproofing at joints between modules and the open ends of incomplete buildings is provided by Portakabin Ltd to suit the construction sequence.

20.3 Where specified, the building modules must be bolted to the foundations.

20.4 Building modules of the same length can be multi-stacked. The modules are bolted together at the four steel column points and along the longitudinal beams.

20.5 The completion of external and internal cladding and trims is carried out on site. Service connections are made and internal subdivisions and finishes completed at joints between modules.

21 Supervision

For the benefit of clients who may wish to carry out their own checks during installation, the following, in addition to those carried out routinely, can be made:

(a) Before each ground-floor module is positioned:
location of dpc's
positioning of sealing strip between adjacent modules.

(b) During positioning of ground-floor modules:
no damage is caused to the steelwork protective systems.

(c) After each ground-floor module is positioned
fixings between modules.

(d) Before each first-, second- and third-floor module is positioned:
positions of sealing strip between adjacent modules.

(e) After each first-, second- and third-floor module is positioned:
fixings between modules.

(f) Completion of roof weatherproofing at junction between modules.

(g) Satisfactory extension of finishings over joints between modules.

(h) Fixing of casings to columns to ensure continuity of fire protective systems.

(i) Satisfactory fixing of ground-floor skirt panels to provide ventilation.

Technical Investigations

The following is a summary of the technical investigations carried out on the Ultima Building System.

22 Investigations

Data were analysed to determine:

structural adequacy
behaviour in fire
air tightness
effect of thermal bridging
roof and wall U values to BS EN ISO 6946 : 1997
floor U values to BS EN ISO 13370 : 1998 and BS EN ISO 10211-1 : 2001.

23 Other investigations

23.1 An examination was made of existing data to assess:

structural strength and stability
behaviour in fire
impact resistance of floor and wall panels
load capacity of roof and floor
physical characteristics of injected, CFC-free polymer insulation
resistance to sound transmission
weathertightness
durability
maintenance requirements
acoustic performance
suitability of three-storey applications.

23.2 Calculations were undertaken and examined in conjunction with the results of the tests referred to in sections 22 and 23, to establish the structural strength and stability.

23.3 Calculations were made and computer simulations carried out to determine the effectiveness of the insulation arrangements and the risk of condensation.

23.4 The manufacturing process was examined, including the methods adopted for quality control, and details were obtained of the quality and composition of the materials used.

Additional Information

The management systems of Portakabin Ltd have been assessed and registered as meeting the requirements of BS EN ISO 9001 : 1994 by SGS Yarsley International Certification Services Ltd (Certificate No Q/444).

Bibliography

BS 2750-3 : 1980 *Measurement of sound insulation in buildings and of building elements — Laboratory measurements of airborne sound insulation of building elements*
BS 2750-4 : 1980 *Measurement of sound insulation in buildings and of building elements — Field measurements of airborne sound insulation between rooms*

BS 5268-2 : 2002 *Structural use of timber — Code of practice for permissible stress design, materials and workmanship*
BS 5268-6.1 : 1996 *Structural use of timber — Code of practice for timber frame walls — Dwellings not exceeding four storeys*

BS 5950-1 : 2000 *Structural use of steelwork in building — Code of practice for design — Rolled and welded sections*
BS 5950-5 : 1998 *Structural use of steelwork in building — Code of practice for design of cold formed thin gauge sections*

BS 6399-1 : 1996 *Loading for buildings — Code of practice for dead and imposed loads*
BS 6399-2 : 1997 *Loading for buildings — Code of practice for wind loads*
BS 6399-3 : 1988 *Loading for buildings — Code of practice for imposed roof loads*

BS 7543 : 1992 *Guide to durability of buildings and building elements, products and components*

BS 8004 : 1986 *Code of practice for foundations*

BS EN 312-1 : 1997 *Particleboards — Specifications — General requirement for all board types*
BS EN 312-5 : 1997 *Particleboards — Specifications — Requirements for load-bearing boards for use in humid conditions*

BS EN 649 : 1997 *Resilient floor coverings — Homogeneous and heterogeneous polyvinyl chloride floor coverings — Specification*

BS EN 651 : 1997 *Resilient floor coverings — Polyvinyl chloride floor coverings with foam layer — Specification*

BS EN 10142 : 2000 *Continuously hot-dip zinc coated low carbon steels strip and sheet for cold forming — Technical delivery conditions*

BS EN 10147 : 2000 *Continuously hot-dip zinc coated structural steels strip and sheet — Technical delivery conditions*

BS EN ISO 6946 : 1997 *Building components and building elements — Thermal resistance and thermal transmittance — Calculation method*

BS EN ISO 9001 : 1994 *Quality systems. Model for quality assurance in design, development, production, installation and servicing*

BS EN ISO 10211 : 2001 *Thermal bridges in building construction — Heat flows and surface temperatures — General calculation methods*

BS EN ISO 12944-2 : 1998 *Paints and varnishes — Corrosion protection of steel structures by protective paint systems — Classification of environments*

BS EN ISO 13370 : 1998 *Thermal performance of buildings — Heat transfer via the ground — Calculation methods*

Conditions of Certification

24 Conditions

24.1 This Certificate:

(a) relates only to the product that is described, installed, used and maintained as set out in this Certificate;

(b) is granted only to the company, firm or person identified on the front cover — no other company, firm or person may hold or claim any entitlement to this Certificate;

(c) has to be read, considered and used as a whole document, as it may be misleading and/or incomplete to be selective;

(d) is copyright of the BBA.

24.2 References in this Certificate to any Act of Parliament, Regulation made thereunder, Directive or Regulation of the European Union, Statutory Instrument, Code of Practice, British Standard, manufacturers' instructions or similar publication, shall be construed as references to such publication in the form in which it was current at the date of this Certificate.

24.3 This Certificate will remain valid for an unlimited period provided that the product and the manufacture and/or fabricating process(es) thereof:

(a) are maintained at or above the levels which have been assessed and found to be satisfactory by the BBA;

(b) continue to be checked by the BBA or its agents; and

(c) are reviewed by the BBA as and when it considers appropriate.

24.4 In granting this Certificate, the BBA makes no representation as to:

(a) the presence or absence of any patent or similar rights subsisting in the product or any other product;

(b) the right of the Certificate holder to market, supply, install or maintain the product; and

(c) the nature of individual installations of the product, including methods and workmanship.

24.5 Any recommendations relating to the use or installation of this product which are contained or referred to in this Certificate are the minimum standards required to be met when the product is used. They do not purport in any way to restate the requirements of the Health & Safety at Work etc Act 1974, or of any other statutory, common law or other duty which may exist at the date of this Certificate or in the future; nor is conformity with such recommendations to be taken as satisfying the requirements of the 1974 Act or of any present or future statutory, common law or other duty of care. In granting this Certificate, the BBA does not accept responsibility to any person or body for any loss or damage, including personal injury, arising as a direct or indirect result of the installation and use of this product.

BBA BRITISH BOARD OF AGRÉMENT
TECHNICAL APPROVALS FOR CONSTRUCTION

In the opinion of the British Board of Agrément, the Ultima Building System is fit for its intended use provided it is installed, used and maintained as set out in this Certificate. Certificate No 02/S030 is accordingly awarded to Portakabin Ltd.

On behalf of the British Board of Agrément

[redacted]

Date of issue: 4th December 2002

Chief Executive

British Board of Agrément
P O Box No 195, Bucknalls Lane
Garston, Watford, Herts WD25 9BA
Fax: 01923 665301

©2002

e-mail: mail@bba.star.co.uk
website: www.bbacerts.co.uk