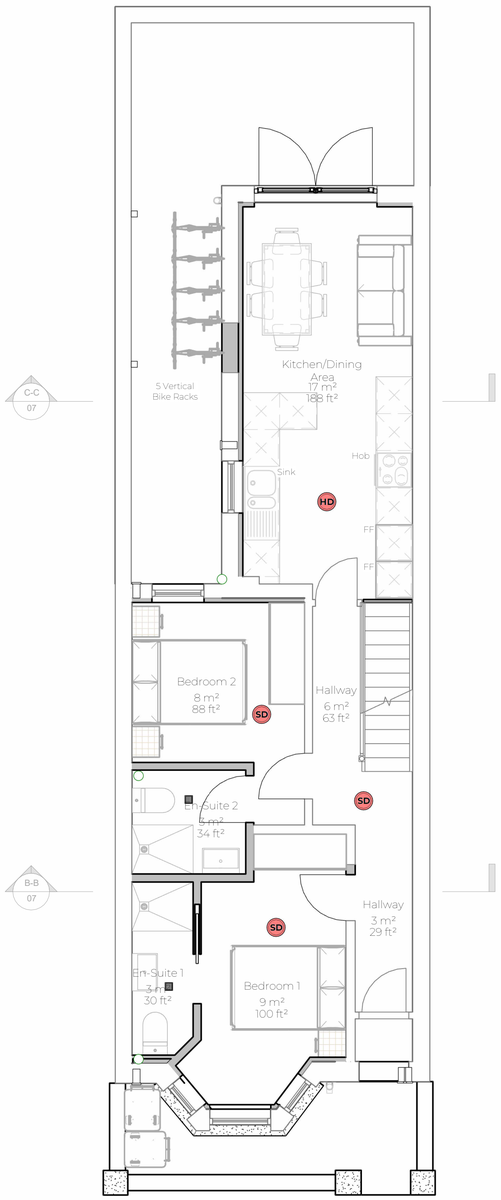

Proposed Ground Floor Plan

1 : 50

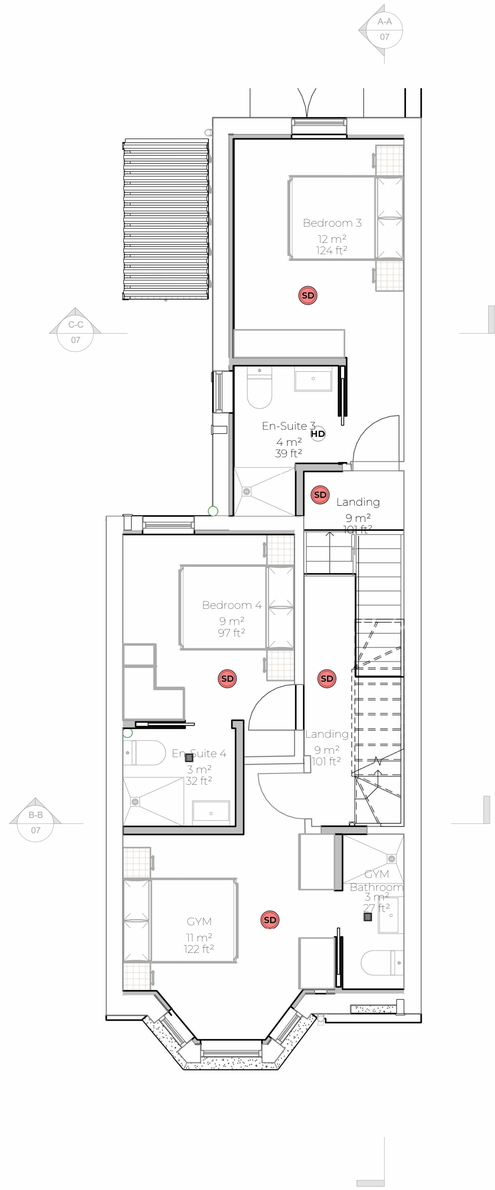

Proposed First Floor Plan

1 : 50

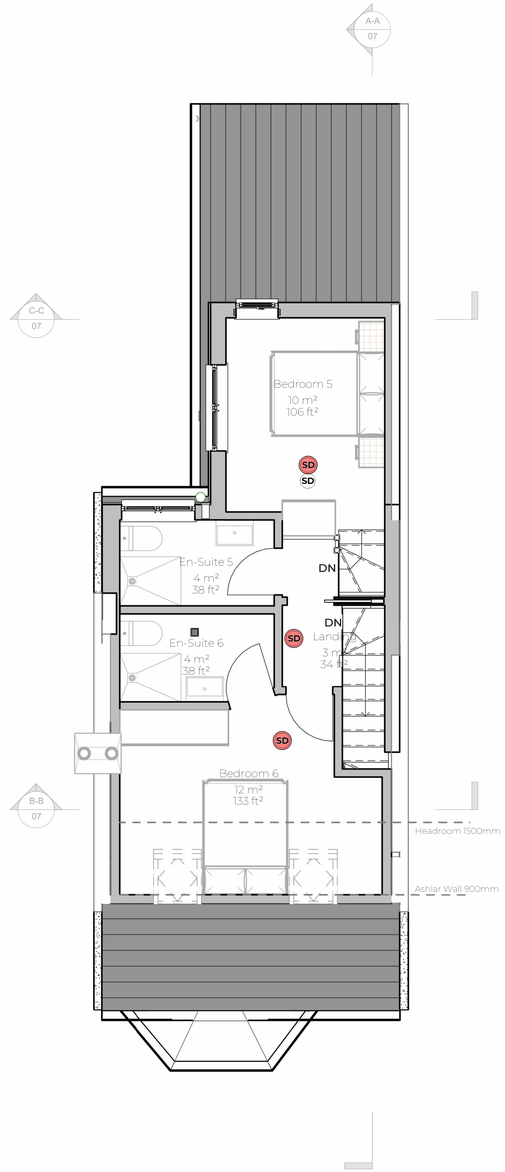

Proposed Loft

1 : 50

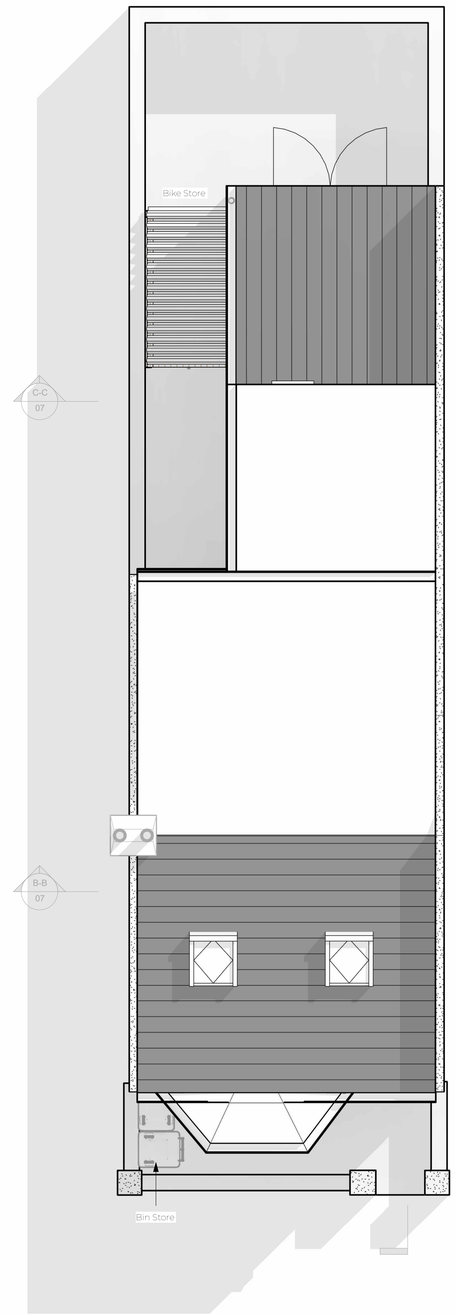

Roof Plan

1 : 50

LEGEND

Name 150 150	Room Name and Area
GF.ID.01 FD30	Door Tag and Fire Rating
SD HD CO	Smoke, Heat and Carbon Monoxide Detector

Notes:

1. THE COPYRIGHT OF THIS DRAWING IS VESTED IN ARCHEVOLVE AND IT MAY NOT BE REPRODUCED IN WHOLE OR PART OR USED FOR THE MANUFACTURE OF ANY ARTICLE WITHOUT THE EXPRESS PERMISSION OF THE COPYRIGHT HOLDERS.

2. WORK TO FIGURED DIMENSIONS ONLY.

3. THIS DRAWING IS TO BE READ IN CONJUNCTION WITH ALL RELEVANT ARCHITECT'S, SERVICE ENGINEER'S AND ARCHEVOLVE AND SPECIFICATIONS.

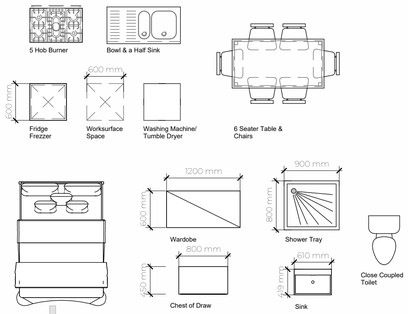

Rev_A	Added Bin & Bike Store	AP	28/12/25

Revision Number	Revision Description	Issued by	Revision Date

DATE:	STATUS:	SHEET SIZE:
17/04/25	PLANNING ISSUE	A1

SCALE:	DRAWN:	CHECKED:
As indicated	AP	

CLIENT:	SITE ADDRESS:
Evo Homes	62 Clifton Road Worthing BN11 4DP

REVISION: Rev_A

DRAWING NO: ARC/082/25/05

DRAWING: HMO

TITLE: Proposed Floor Plans

PROJECT NO: 62CliffRd

ARCHEVOLVE
// design @archevolve.co.uk
// www. archevolve.co.uk
// 07830 325566
CIAT CHARTERED PRACTICE

0m 1m 2m 3m 4m 5m

VISUAL SCALE 1:50 @ A1