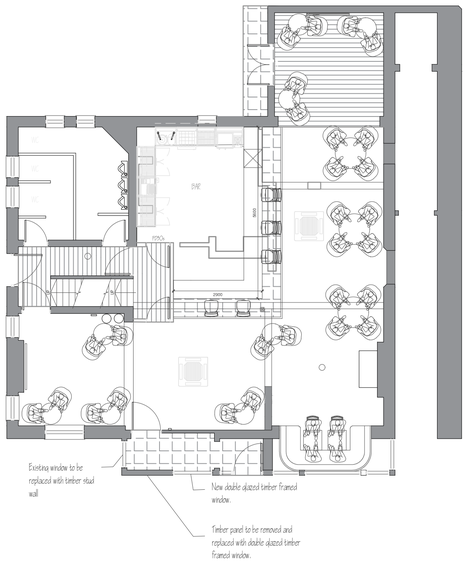

Exisitng Ground floor plan
Scale: 1:100

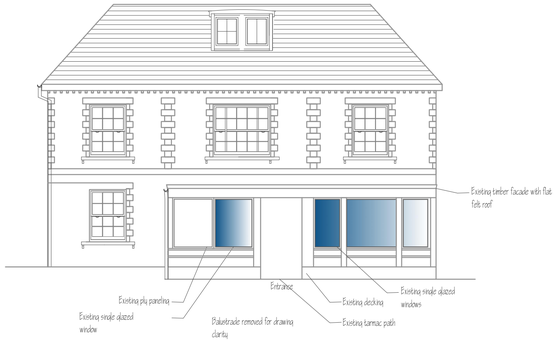

Existing Front Elevation
Scale: 1:100

Scale: 1:100

0 5

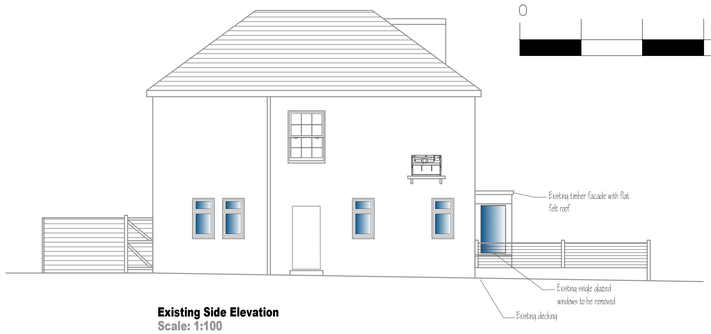

Existing Side Elevation
Scale: 1:100

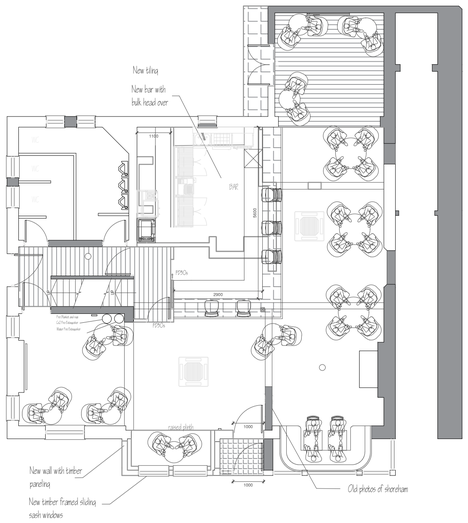

Proposed Ground floor plan
Scale: 1:100

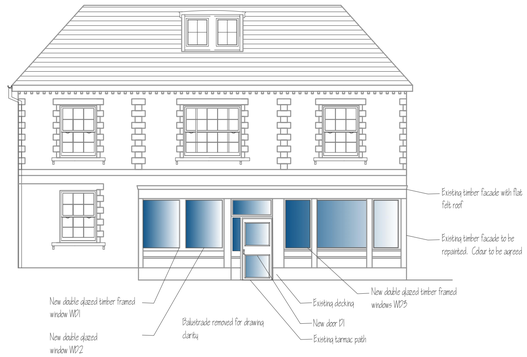

Proposed Front Elevation
Scale: 1:100

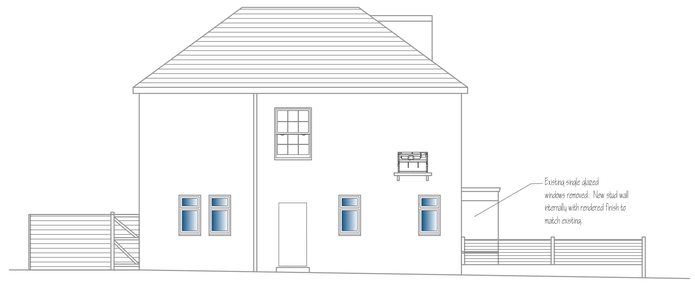

Proposed Side Elevation
Scale: 1:100

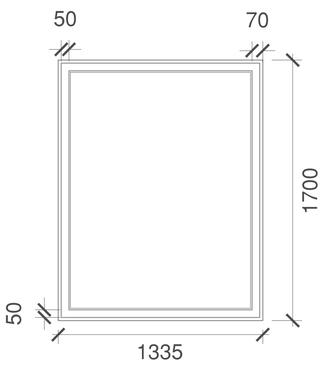

Existing Windows to porch
Scale: 1:20

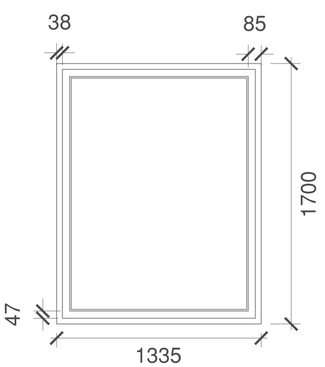

Proposed Windows to porch
Scale: 1:20

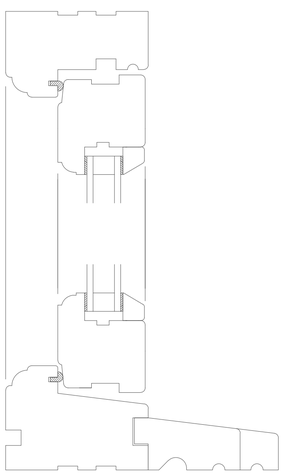

Proposed Windows Detail to porch
Scale: 1:2



Location Plan
Scale: 1:1250

Front porch

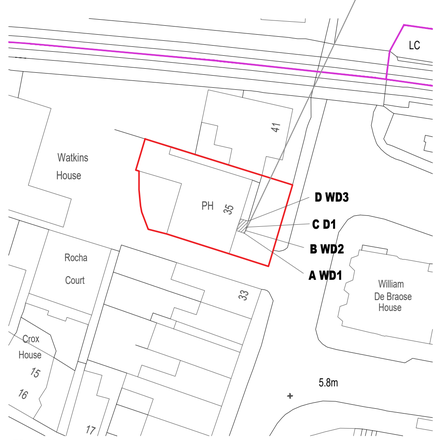

Block Plan
Scale: 1:500

0 10 20 30 40 50m

PARTY WALLS:
Work to Party Walls (beam bearings, etc) are subject to Party Wall Agreements with neighbours to be arranged by Client in accordance with Party Wall Act

NOTE:
This drawing is to be read in conjunction with the Construction Notes and Structural Engineers details

1 / A — denotes section number / denotes drawing reference for section

SERVICES LEGEND

- TV — TELEVISION POINT
- TELEPHONE POINT
- 13 AMP DOUBLE SWITCHED SOCKET OUTLET
- CEILING LIGHT - PENDANT FITTING
- ONE WAY LIGHT SWITCH
- TWO WAY LIGHT SWITCH
- NEON INDICATOR SWITCH FOR LOFT LIGHT
- ENERGY EFFICIENT RECESSED DOWNLIGHTER
- S — MAINS INTER-LINKED SMOKE DETECTOR
- SPRINKLER HEAD (FLUSH TYPE)
- NEW RADIATOR (INDICATIVE SIZE)

Revision	Date	Details	Initials
A	22.01.2018	Planning amendments	DLS

Do not scale from drawings, apart for the use of planning. Check all levels and dimensions before carrying out work. These drawings and designs are the property of Shear Architectural Design Ltd. and must not be copied, retained or used without written approval.

© Copyright

SHEAR DESIGN
CREATE INSPIRE ENHANCE

2 Saffron Close
Shoreham By Sea
West Sussex
BN43 6JF

07881 656512
info@sheararchitectraldesign.co.uk

PROJECT

Chris Ford
Buckingham Arms ,
Shoreham by Sea,
West Sussex.
BN43 5WA

Replace exiting single glazed windows and front door with new double glazed units to front porch

DRAWING TITLE

DATE:	31.12.2017
SCALE:	Various
DRAWN:	DLS
CHECKED:	
SHEET:	OF

NORTH

PROJECT NUMBER	DRAWING NUMBER	REVISION
17/61	SK1	A