TYPICAL FRAME PROFILES

DOOR FRAME (USE AT HEAD AND/OR JAMBS) EXTERIOR GLAZED OPTION SHOWN

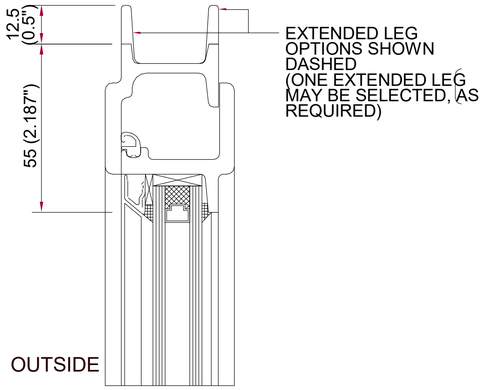

DOOR FRAME (USE AT HEAD AND/OR JAMBS) EXTERIOR GLAZED OPTION SHOWN

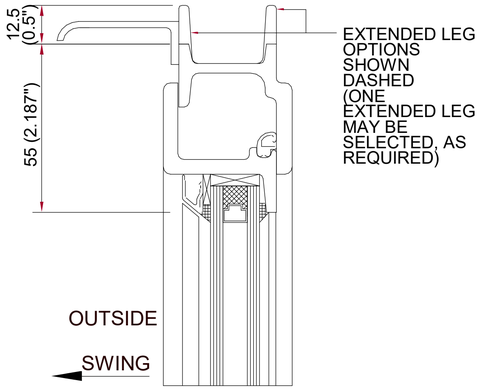

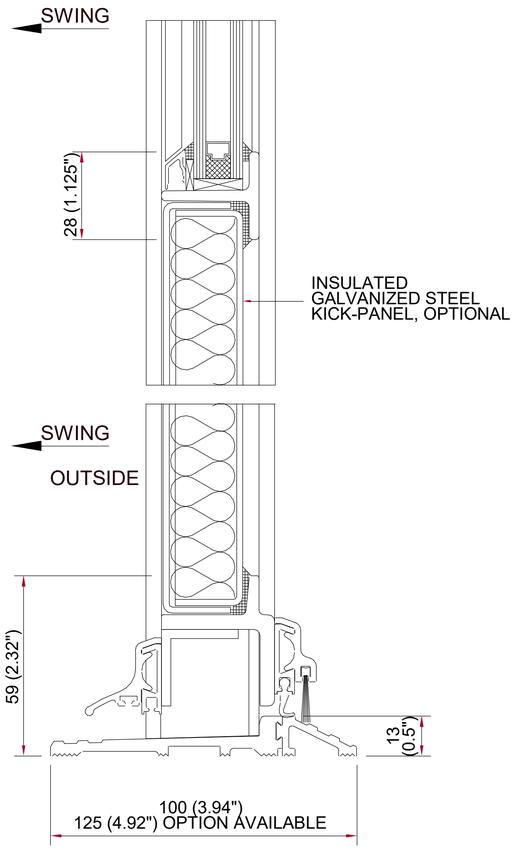

DDA/ADA COMPLIANT THRESHOLD OPEN-IN, EXTERIOR GLAZED OPTION SHOWN (OPEN-IN, INTERIOR GLAZED OPTION AVAILABLE)

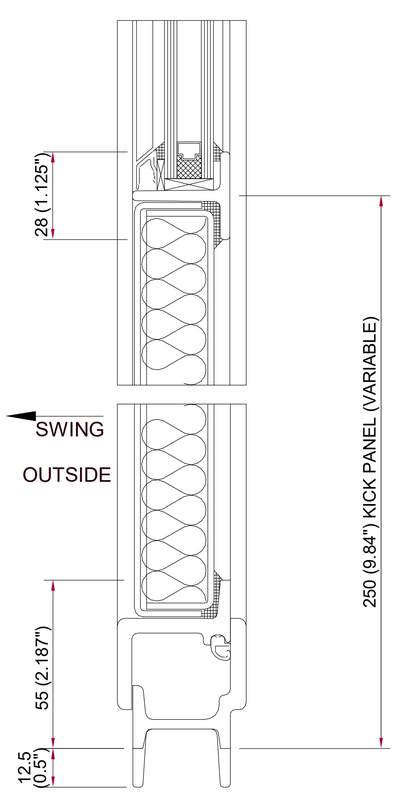

STANDARD DOOR SILL OPEN-OUT, EXTERIOR GLAZED OPTION SHOWN (OPEN-OUT, INTERIOR GLAZED OPTION AVAILABLE)

TYPICAL COUPLING DETAILS

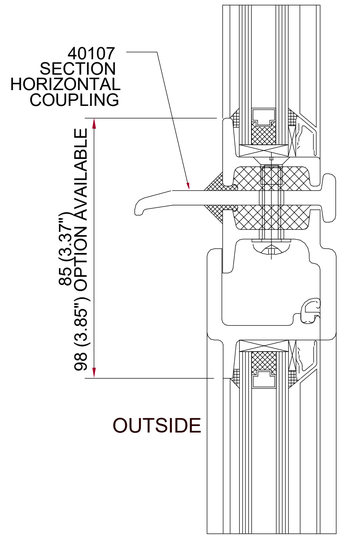

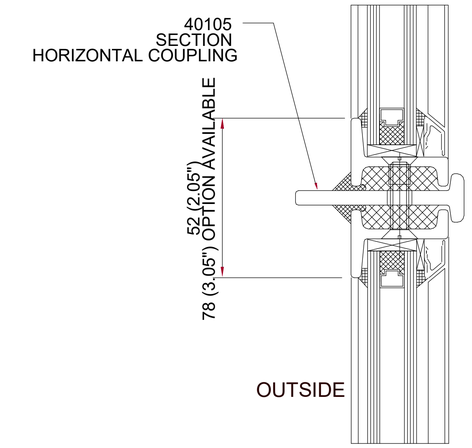

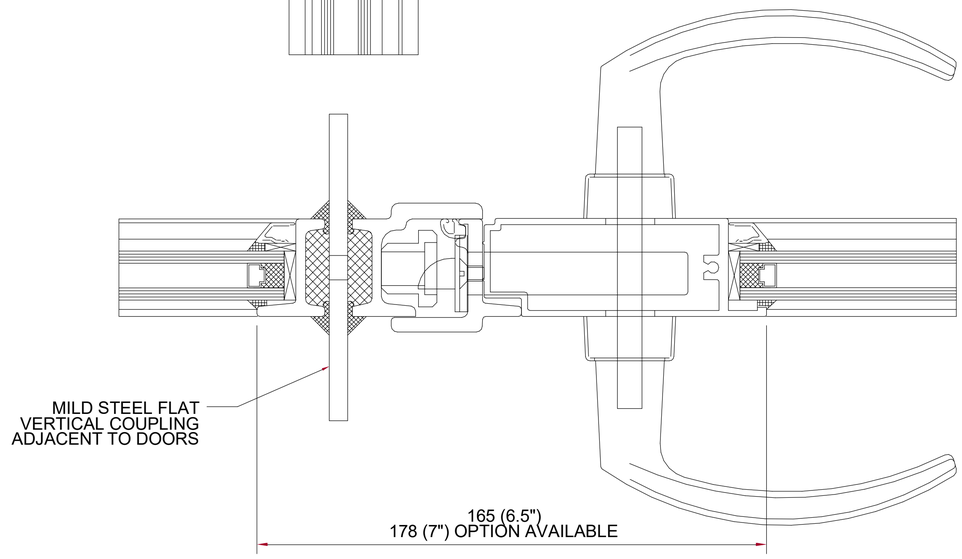

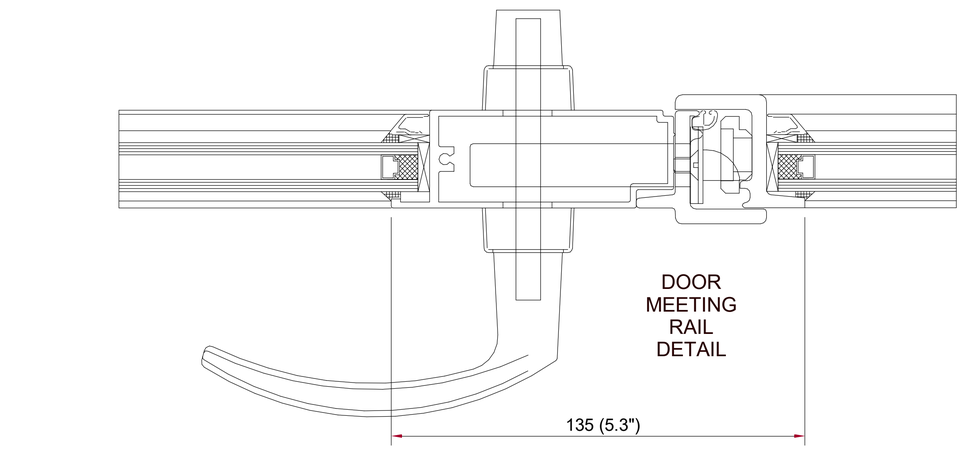

Revisions

SCALE 1: 10 0 10 20 30 40 50 mm

SCALE 1: 20 200 0 200 400 600 800 1000 mm

SCALE 1: 50 0.5 0 0.5 1 1.5 2 2.5 m

SCALE 1: 100 1 0 1 2 3 4 5 m

SCALE 1: 500 5 0 5 10 15 20 25 m

SCALE 1: 1250 10 0 10 20 30 40 50 m

Materials

Drawing Number 2023/189	Sheet 2 of 2
Size A1	Scale 1:1, 1:20, 1:50, 1:100, 1:500, 1:1250

Project

Section details of proposed doors
December 2023

Job Title

Ground Floor Flat
20 Longfellow Road
Worthing
West Sussex
BN11 4NU

Do Not scale from this drawing except for planning as photocopies will be subject to distortion
Drawings to be read in conjunction with all other Designers and structural engineers contract drawings and specifications:
Any discrepancies must be brought to the attention of the Designer immediatialy.
The contractor must verify all dimensions by site measurement before ordering materials or manufacturing components
Substitute materials and products to those named will be acceptable if proven to be of equal or higher performance and not in conflict with other elements

M.J.Humphrey Ltd

RICS cabe chartered association of building engineers

Mel Humphrey MRICS, MBEng
9 Aldsworth Avenue
Goring By Sea
West Sussex
BN12 4XQ

Mel@mjhumphrey.co.uk
07701055182

Adam Humphrey
4 Thalassa Road
Worthing
West Sussex
BN11 2HH

Adam@mjhumphrey.co.uk
07812419142