

Plan view
1:50

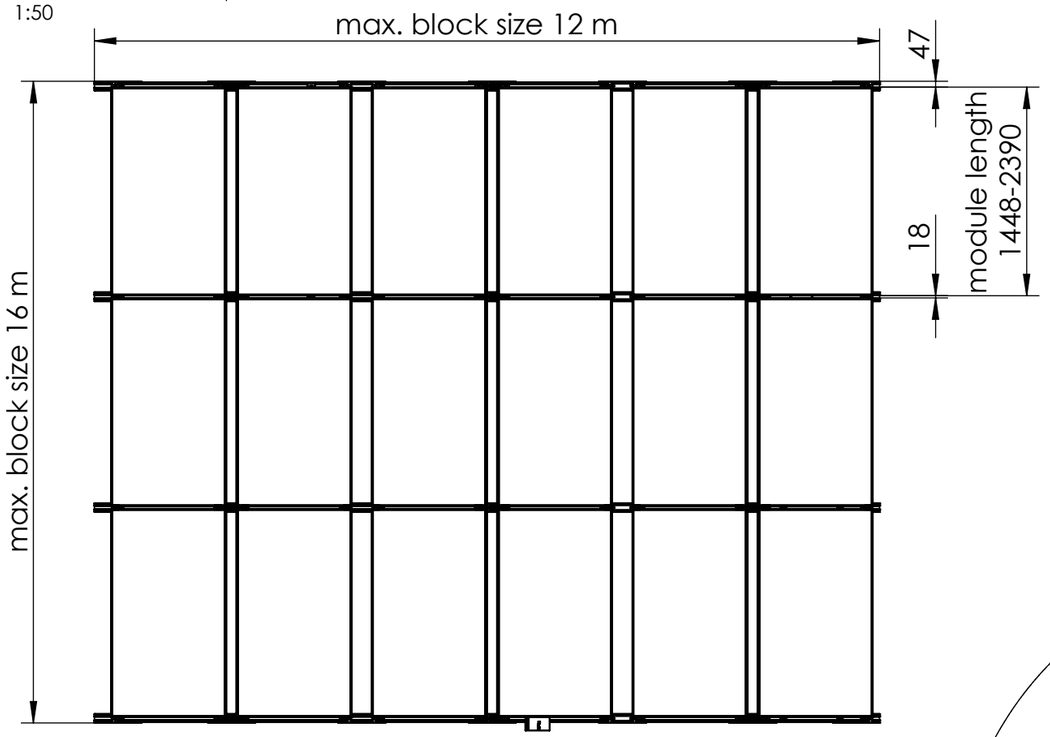

Detail X
1 : 10

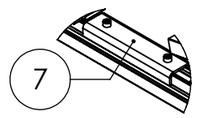

Layout sample
1:50

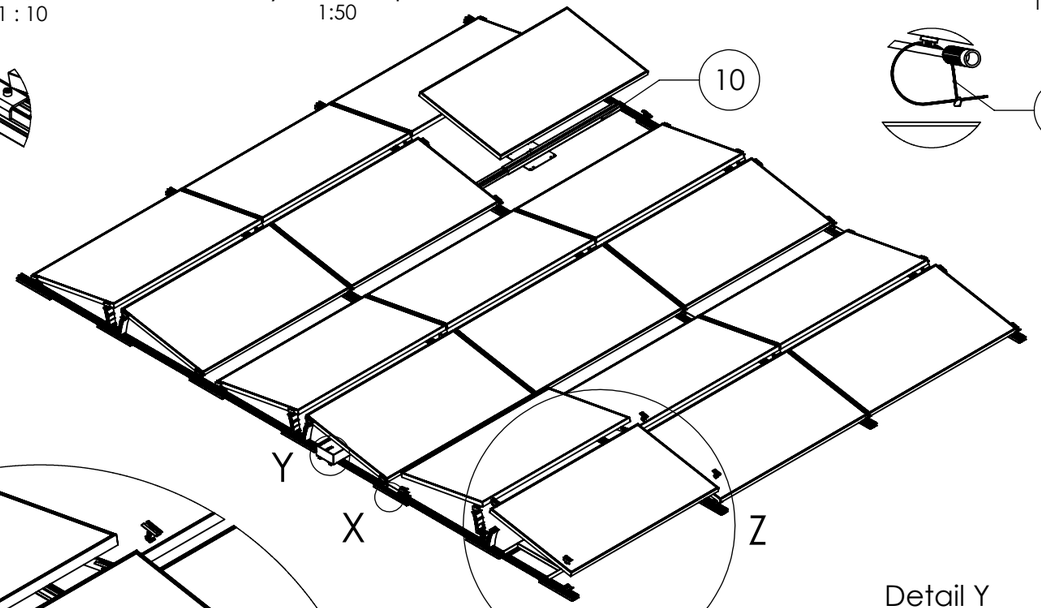

Detail W
1 : 5

Detail Z

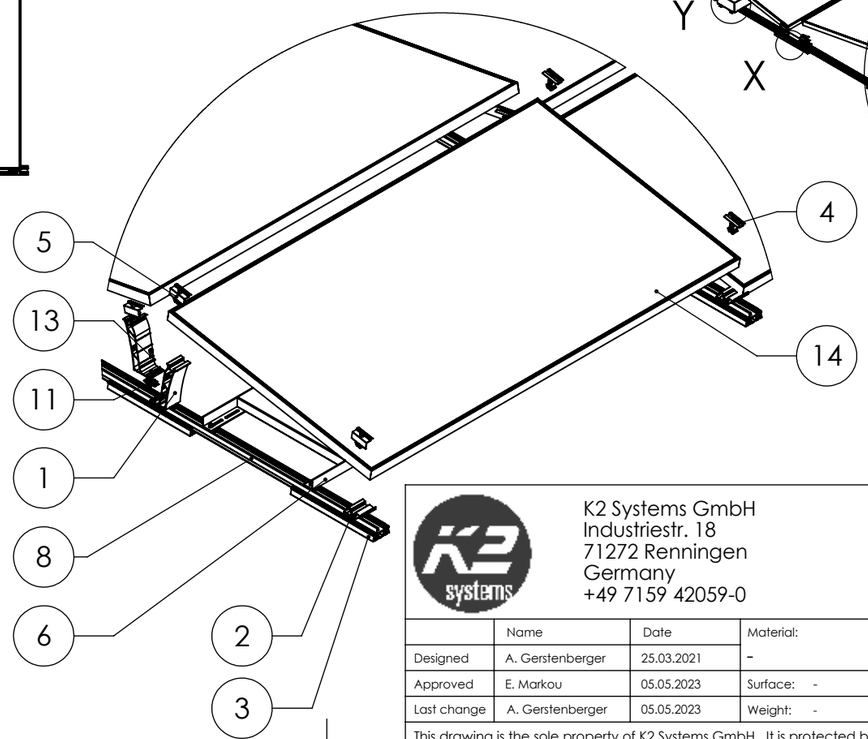

Detail Y
1 : 10

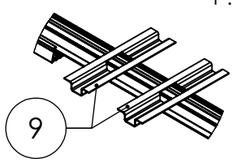

Pos.No.	Designation	optional
1	Dome 6.10 Peak	
2	Dome 6.10 SD	
3	Dome Mat S	
4	DomeClamp MC Set	
5	DomeClamp EC Set	
6	Dome Porter	x
7	Dome FlatConnector Set	x
8	BasicRail 22	
9	Dome SpeedPorter	x
10	Dome FixPro	x
11	MK2	
12	CableManager	x
13	Socket head bolt serrated ISO 4762 - M8x20	
14	Module	

K2 Systems GmbH
Industriestr. 18
71272 Renningen
Germany
+49 7159 42059-0

Designation:

Data sheet
D-Dome 6.10 Classic
AssemblyDimension

	Name	Date	Material:		Item no.:	A3
Designed	A. Gerstenberger	25.03.2021	-		---	
Approved	E. Markou	05.05.2023	Surface: -		Drawing no.: 07-481-08	All dimensions in mm
Last change	A. Gerstenberger	05.05.2023	Weight: -	Scale: 1:20		Sheet 1 of 2

This drawing is the sole property of K2 Systems GmbH. It is protected by copyright and may only be copied, reproduced or distributed to a third party with explicit permission!