FOR PLANNING PURPOSES

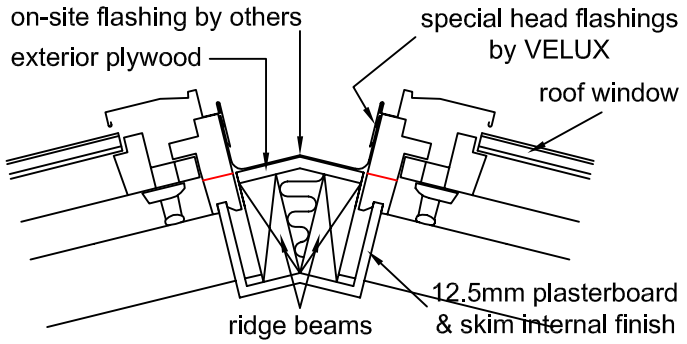

RIDGE DETAIL 1:10

Scale in Metres
0 0.5 for 1:10

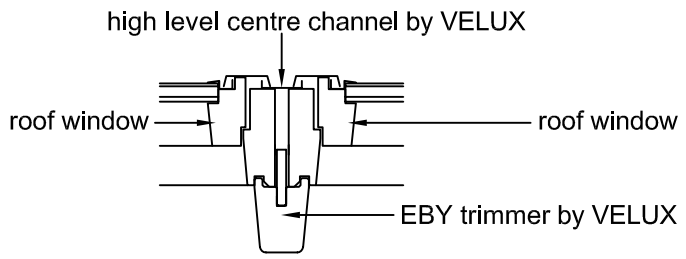

JUNCTION DETAIL 1:10

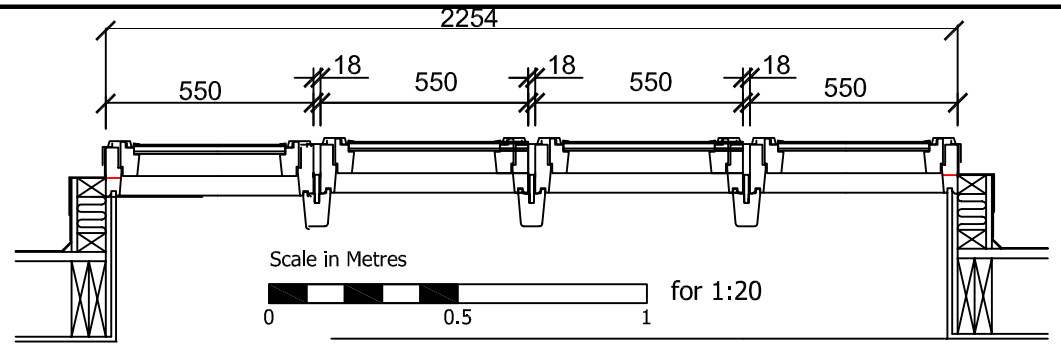

LONGITUDINAL SECTION 1:20

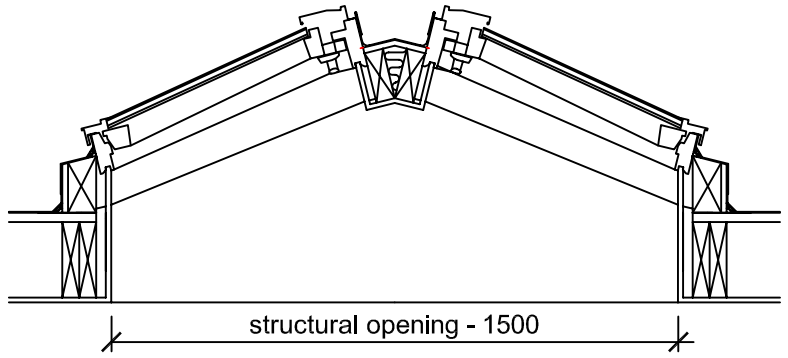

CROSS SECTION 1:20

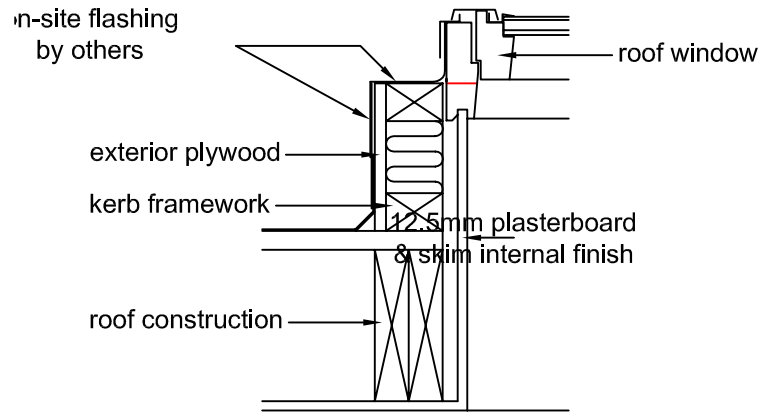

SIDE FRAME DETAIL 1:10

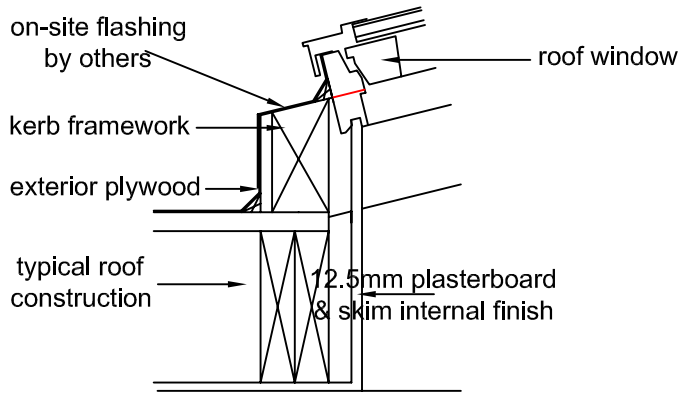

SILL DETAIL 1:10

© Copyright

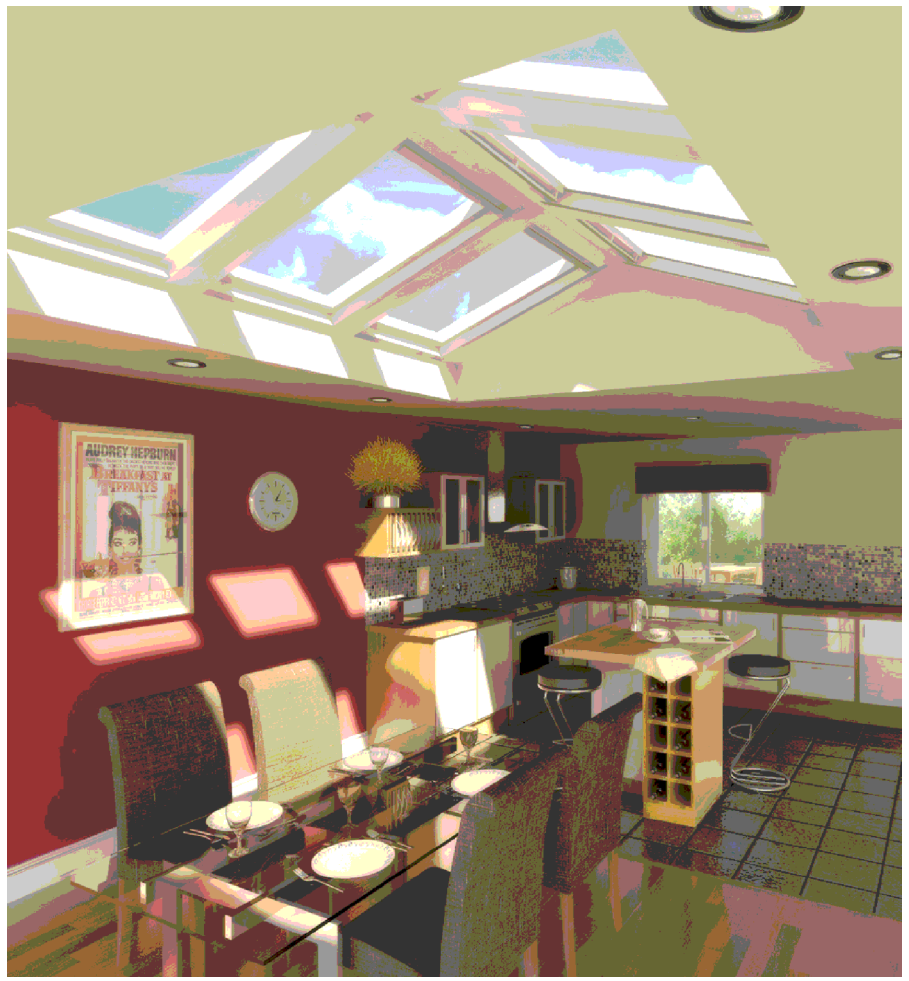

NOTES.

(i) This drawing is not to be scaled by contractors , work to figured dimensions only, confirmed on site.

(ii) This drawing is to be read in conjunction with all relevant architectural drawings, detailed specifications where applicable and all associated drawings in this series.

(iii) Any discrepancy on this drawing is to be reported immediately to the owner for clarification.

(iv) The contractor is responsible for all temporary works and for the stability of the works in progress.

(v) Copyright for all drawings/designs part or full shall remain with KEL In accordance with the Copyright Act 1988

Revision	Date
Client	Mr A. Yagoub
Project	381 Upper Shoreham Road Shoreham BN43 5NF
Title	Velux Atria

KEL Building Advisor Ltd RICS

11.Dale View
Hove
East Sussex
BN3 8LA

TEL/FAX 01273 774867
Mobile 07767 481463
E-mail keith@kelbuilding.co.uk

Scales	Date	Drawn
1:10 1:20	Feb 2021	KEL
Project No.	Paper Size	Dwg. No.
0757	A3	007

BUY WITH CONFIDENCE