Proposed Windows (UPVC) patio Door (UPVC)

Scale: 1:20

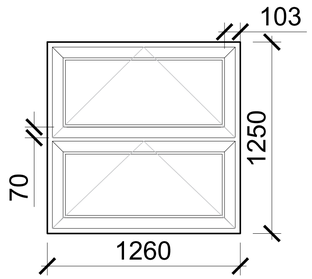

Kitchen

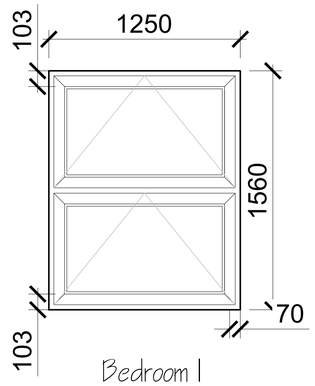

Bedroom 1

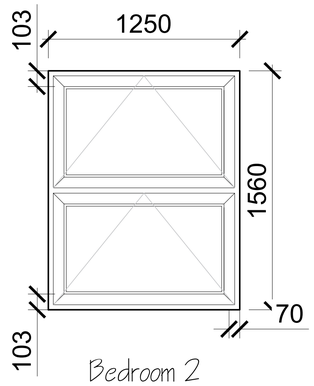

Bedroom 2

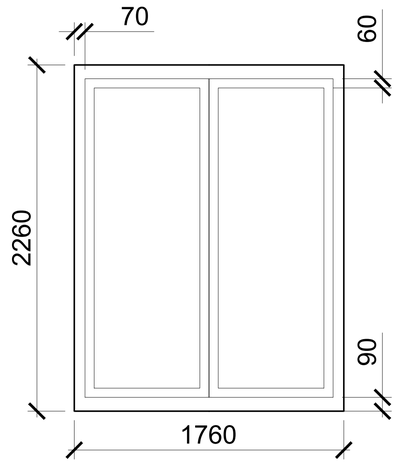

Patio Door

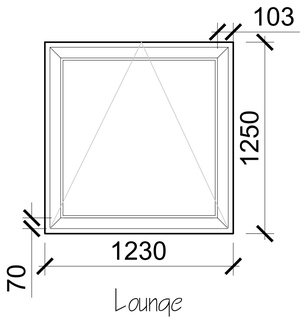

Lounge

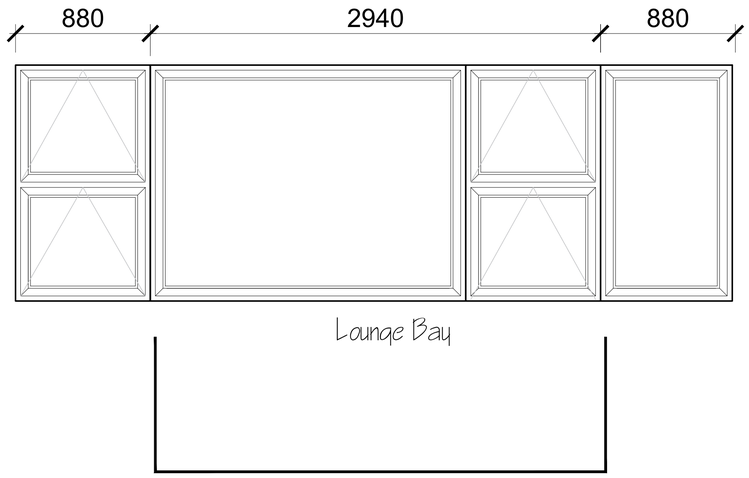

Lounge Bay

SITE PHOTOS

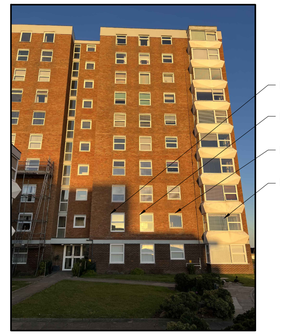

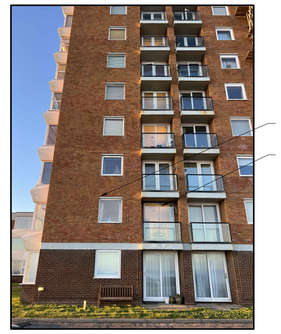



Block Plan
Scale: 1:500



Location Plan
Scale: 1:1250

FOR APPROVAL

NOTE:

This drawing is to be read in conjunction with the Construction Notes and Structural Engineer's details.

The Contractor is responsible for all setting out and must check levels and dimensions on site before ordering materials or commencing work.

Refer to written dimensions only. Do not scale from drawings, except for the purposes of Planning assessment.

The Architect is to be immediately notified of any omissions or discrepancies.

Building work should not commence until all statutory approvals have been granted, i.e. Planning, Building Control, etc.

If a public sewer is discovered, consent to 'Build-over/Close-to' may be required from the Water Authority.

PARTY WALLS:

Work to Party Walls (including insertion of flashings, beam bearings, etc) are subject to Party Wall agreements with neighbours and are to be arranged by the Client in accordance with the Party Wall Act (i.e. Providing two months written notice)

Below ground drainage - Surface Water
Below ground drainage - Foul Water
Discharge pipes
Existing structure
Proposed structure
Removed structure
Section line

Revision	Date:	Details:	Initials:
A	05/05/2023	Planning Amendments	DLS

These drawings and designs are the property of Shear Architectural Design Ltd and must not be copied, retained, or used without prior written consent. © Copyright

SHEAR ARCHITECTURAL
CREATE INSPIRE ENHANCE

Unit 6 Riverside Business Centre,
Brighton Road,
Shoreham-by-Sea
BN43 6RE

07881 656512
info@sheararchitecturaldesign.co.uk
www.sheararchitecturaldesign.co.uk

PROJECT:

Flat 25, Milford Court,
Brighton Rd, Lancing
West Sussex
BN15 8RN

DRAWING TITLE:

New Windows and patio door

NORTH

DATE:	21/03/2023
SCALE:	Various @ A1
DRAWN:	DS
CHECKED:	-
SHEET	OF

PROJECT NUMBER:	DRAWING NUMBER:	REVISION:
23/13	PL1	A

METERS @ 1:50 | METERS @ 1:100 | METERS @ 1:200 | METERS @ 1:500 | METERS @ 1:1250