

1:20 Scale Bar

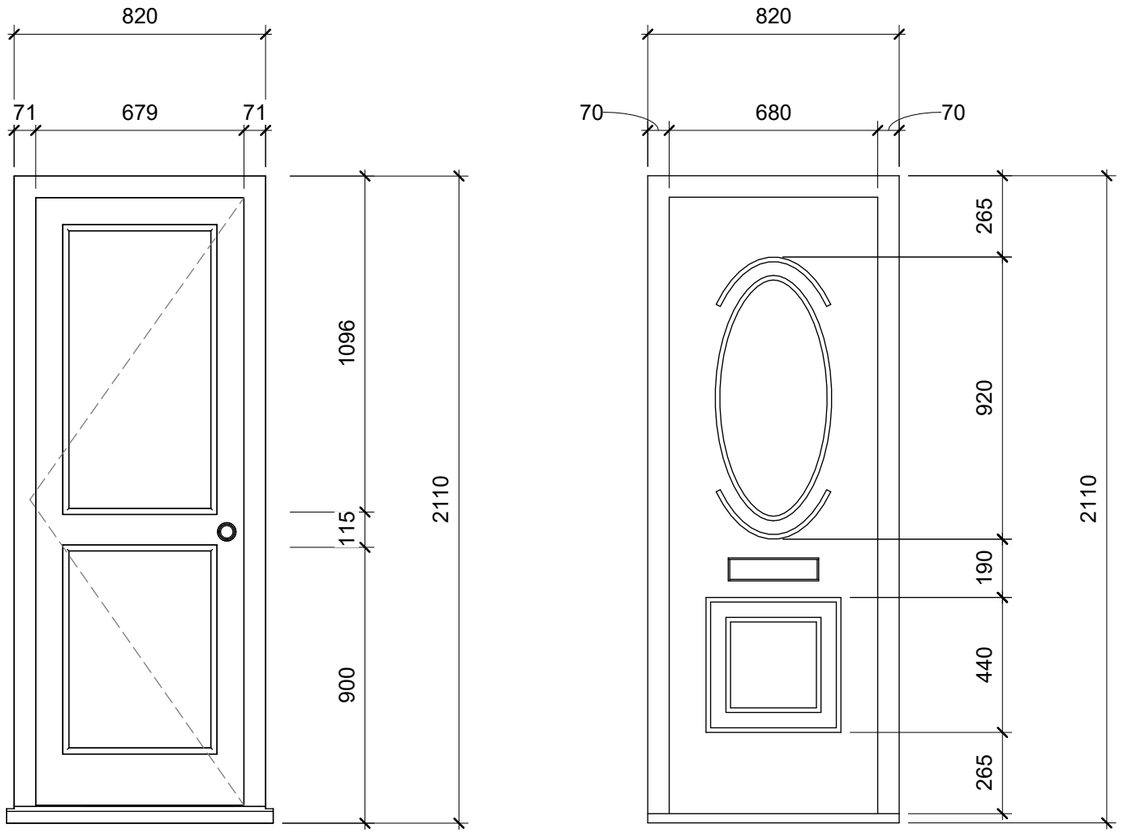

1 Door Elevation

1 : 20

Scale 1:100

2m 0m 2m 4m 6m 8m 10m

Scale 1:50

1m 0m 1m 2m 3m 4m 5m

Contract No.

FHI 134288

Site Address -

17 Fairlawn Drive,
Worthing,
West Sussex,
BN14 8AX

Drawing No.

5 of 5

Door Elevation

All Dimensions in mm

Scale: 1 : 20 **@A3**

Signed Off on - 20/10/2025

Review on - 23/10/2025

First Home Improvements
Station Road Industrial
Estate Lenwade Norfolk
NR9 5LY

© Drawings, associated documentation and intellectual property is protected under copyright law.
All documentation by First Home Improvements prohibits unauthorised actions such as (but not limited to) the re-issuing and re-production thereof without prior consent.