Development Control Standard No.2

SPACE AROUND NEW DWELLINGS AND FLATS

ADUR
DISTRICT COUNCIL

Civic Centre
Ham Road
Shoreham by Sea
West Sussex BN43 6PR

Telephone : 01273 263222
Facsimile : 01273 263203

CHIEF EXECUTIVES DEPARTMENT

PETER DAVIES
Head of Planning and Policy

DEVELOPMENT CONTROL STANDARD NO. 2

SPACE AROUND NEW DWELLINGS AND FLATS

1. INTRODUCTION

2. RELATIONSHIP BETWEEN DWELLINGS/FLATS

3. AMENITY SPACE

4. ACCESS AND PARKING PROVISION

5. LANDSCAPING

APPENDIX - Standards for parking and servicing in relation to Residential Development.

1.0 INTRODUCTION

PURPOSE OF THE DEVELOPMENT CONTROL STANDARD

1.1 This development control standard is concerned with minimum standards for residential development. It is largely aimed at the provision of dwellinghouses and flats on small infill and redevelopment sites. However, new estate developments would also usually be expected to comply, although the Council may wish to prepare a design brief for larger sites and estate layouts may raise issues beyond the scope of this standard.

POLICIES AND OBJECTIVES

1.2 Relevant Government advice is in Planning Policy Guidance PPG1 "General Policy and Principles" and PPG3 "Housing".

1.3 The West Sussex County Structure Plan (approved by the Secretary of State in l993) sets the overall policy framework and contains a number of relevant policies. It emphasises the primary importance of protecting and improving the urban environment and resisting overintensive and damaging development (policies G1, G7 and B1); requires adequate provision for new housebuilding (G2), setting new dwelling numbers for each District (H1) and encouraging the provision of small dwellings for single persons, small families and the elderly subject to the need for a local mix of dwelling types and sympathy with existing housing in the vicinity (H3) and dwellings for those least able to compete in the existing housing market (H5); and requires adequate access and parking (T14). Policies of particular relevance to this Standard are G5, which states that development will be required to meet high standards of design, construction and layout sympathetic to and in scale with its surroundings; and B2 aims to prevent "town cramming" and states that infill and redevelopment in defined built-up areas will normally be permitted subject to not detracting from the environmental quality of established urban areas and with particular regard to whether height, massing, site coverage or parking for new buildings would diminish unacceptably the amenity or privacy enjoyed by existing occupants, whether a satisfactory environment would be created for residents of new houses, and the effect on attractive trees and areas or urban open space valuable for amenity, recreation and wildlife.

The Structure Plan is being reviewed, and a Draft Plan was placed on statutory deposit in November 2001.

1.4 The Adur District Local Plan 1996 defines the boundary of the built-up area and develops the housing requirements of the Structure Plan (in policies AH1, 3, 5 and 6). It also contains detailed policies for safeguarding specific areas or features such as Conservation Areas (AB4), Listed Buildings (AB7 - 11), buildings of townscape merit (AB12), amenity open space (AB22) and trees (AB25), as well as requirements for access and parking (AT12 and 13), and in certain cases, for landscaping and tree planting (AB26 and 27), noise insulation from certain road, railway and aircraft noise (AP8), or archaeological features (AB1).

1.5 Of particular relevance is **Policy AH2** which, in effect, sets the objectives of this Standard. It states:-

New residential development by way of infilling or redevelopment will be acceptable in the built-up area, providing the site is not allocated for any other purpose in this Local Plan. Any proposal will be expected to be designed so that:-

(a) its appearance, character and scale create a pleasant place in which to live and is in keeping with and enhances the existing local environment with particular attention being paid to the architectural form, height, materials, density and layout of both buildings and associated structures and hard-surfaced areas;

(b) it respects the existing natural features of the site, including land form and trees;

(c) it does not have an unneighbourly effect on existing dwellings by reason of unacceptable loss of privacy, daylight/sunlight, outlook or open amenity space;

(d) it incorporates adequate standards of residential amenity for the new dwelling(s) in terms of open amenity space, daylight/sunlight, outlook and privacy.

(e) access arrangements to the public highway and on-site parking arrangements are acceptable under Policy AT12; and

(f) it accords with the standards adopted by the District Planning Authority.

BUILDING REGULATIONS

1.6 It should be noted that the Building Regulations govern minimum health and safety standards of new developments and these requirements will need to be met in any new development. Queries on this matter should be directed to the Building Control Section of the Planning and Policy Division.

2.0 RELATIONSHIP BETWEEN DWELLINGS/FLATS

2.1 The space around and between dwellings/flats is an important factor in the creation of a pleasant residential environment, contributing to the individual character, identity and appearance of an area. It is also important to ensure the provision of adequate privacy and daylight to individual dwellings/flats. In infill and redevelopment schemes new buildings should respect the existing character and appearance of an area and ensure the retention of adequate privacy for and daylight to existing dwellings/flats.

2.2 The use of density as a criteria for controlling developments is considered to be very crude and will not in itself ensure a good quality of residential environment. It is considered that generally the specific requirements of a site will usually determine the acceptable density.

2.3 Residential developments, in order to prevent over-developed layouts, should not have an excessive overall site coverage of buildings and hard surfaced areas .

2.4 The space required between buildings is affected by the location of principal windows and the need to maintain privacy between facing windows and allow light to enter such windows. A distance of 22m is the minimum required between facing principal windows in order to retain sufficient privacy. For developments over 2 storeys in height this distance will need to be increased.

2.5 Where a principal window faces a solid obstruction a distance of 11m is required between the window and a single-storey structure or 14m between a principal window and a two-storey structure, in order to allow adequate light to enter the windows. In the case of flats, developments should be avoided which include flats with only north-facing windows since these would not benefit from any direct sunlight.

2.6 Elevations with no principal windows should be set back at least 1m from a site boundary to allow access for maintenance and to avoid a cramped appearance.

2.7 The requirements considered above can be applied to the location of a dwelling/flat in relation to its side, rear and front boundaries.

SIDE BOUNDARIES

2.8 In the case of small detached, semi-detached and end-of-terrace dwellings a minimum gap of 1m should be provided between any wall of the dwelling and the side boundary. However, on a corner plot and in the case of large detached or semi-detached houses (over 10m wide or more than two-storeys high) and blocks of flats, a gap of at least 2m will be required in order to avoid a cramped appearance. An exception may be made in the case of linked semi-detached dwellings where pairs of houses are linked by a pair of garages. Detached garages to the side of a dwelling may also be acceptable abutting the boundary, but preferably should still leave a gap of at least 1m between the dwelling and the garage to provide access to the rear garden.

Side Boundaries

A minimum gap of 1m should be provided on the side boundary.
But for larger houses and flats a minimum of 2m will be required.

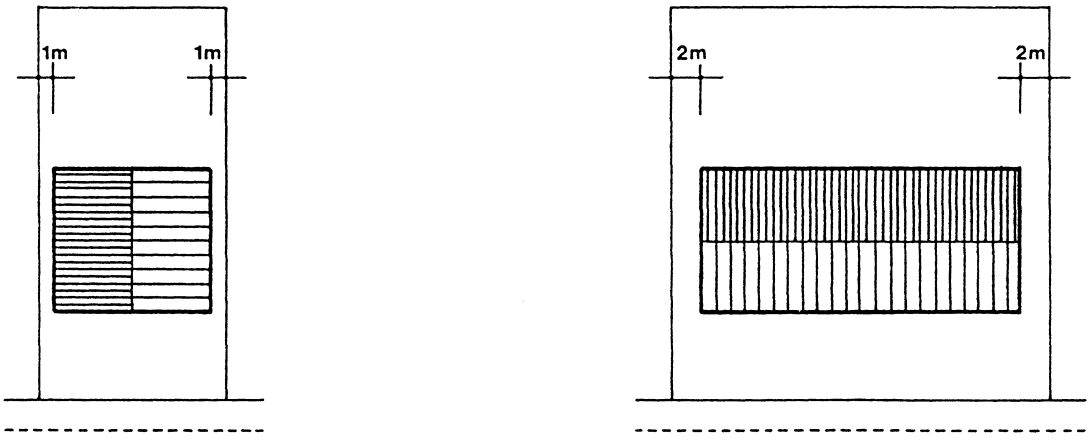

REAR BOUNDARIES

2.9 The acceptable distance between the rear of buildings is governed mainly by the distance required to give adequate privacy between facing principal windows, which is 22m in the case of 2 storey developments. However, houses or bungalows should preferably be designed so as to allow for the possibility of future extensions constructed under the provisions of the General Permitted Development Order 1995 as "permitted development". Therefore, whilst the minimum distance between the rear of one or two-storey dwellings is 22m, "permitted development" rights for two-storey rear extensions and roof extensions to houses will be removed by condition unless there is at least 28m between the rear walls (which would be sufficient to allow for small extensions).

Rear Boundaries

The minimum distance between the rear of one or two-storey dwellings is 22m.

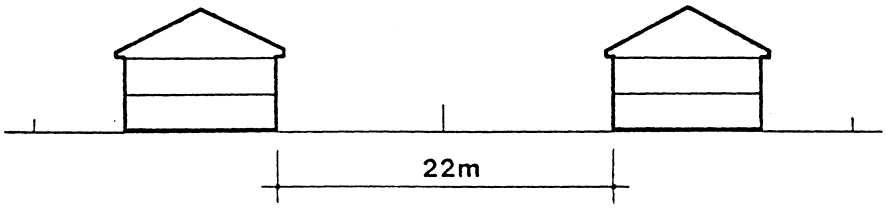

2.10 A distance of 22m is considered sufficient between 2 storey blocks of flats (which have no "permitted development" rights) but in the case of three-storey houses or flats a distance of 28m would be required. Where a one or two-storey building backs onto a three-storey building a space of 28m would also be required. Higher buildings would need to be considered on their merits.

Rear Boundaries

The minimum distance between the rear of three-storey houses or flats is 28m.

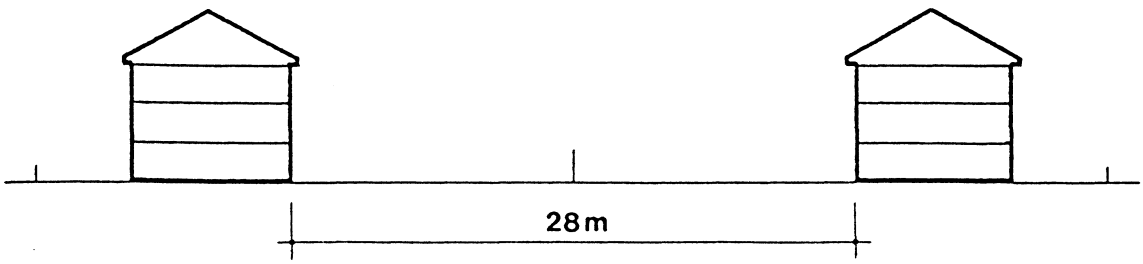

2.11 On corner properties, where principal windows on the rear of one dwelling face the side of another dwelling or block of flats (which does not contain principal windows), a distance of 11m is required from a single-storey dwelling or structure (such as a garage) and 14m from a two-storey dwelling or building. If the rear of a dwelling faces the side of a three-storey block of flats (which does not contain principal windows), then a distance of 20m would be required, to avoid an overbearing effect and to ensure adequate outlook and daylight.

Rear/Side Boundaries

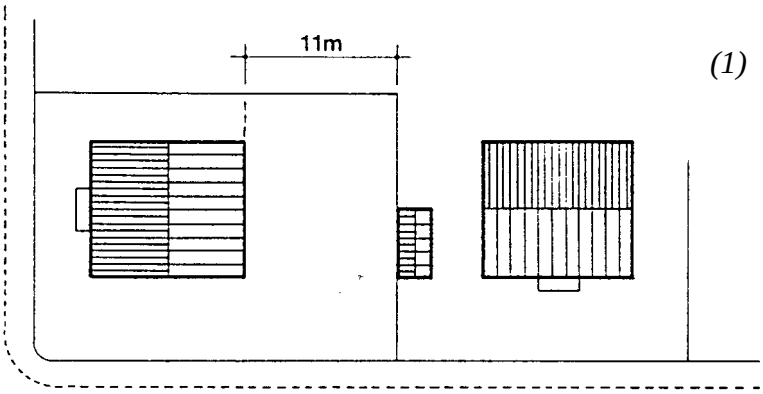

(1) Where the rear of one dwelling faces the side of a single-storey building a minimum of 11m is required.

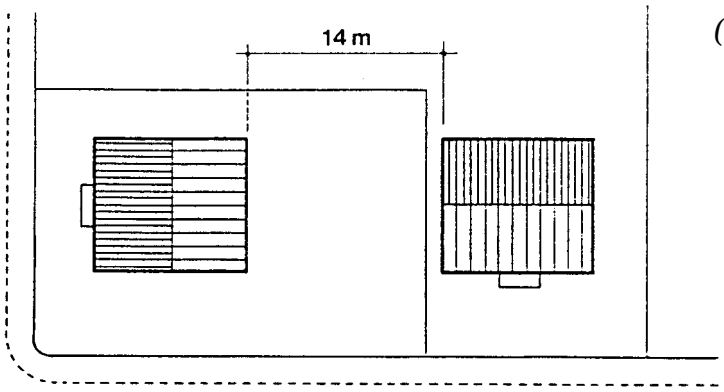

(2) Where the rear of one dwelling faces the side of another two-storey dwelling a minimum of 14m is required

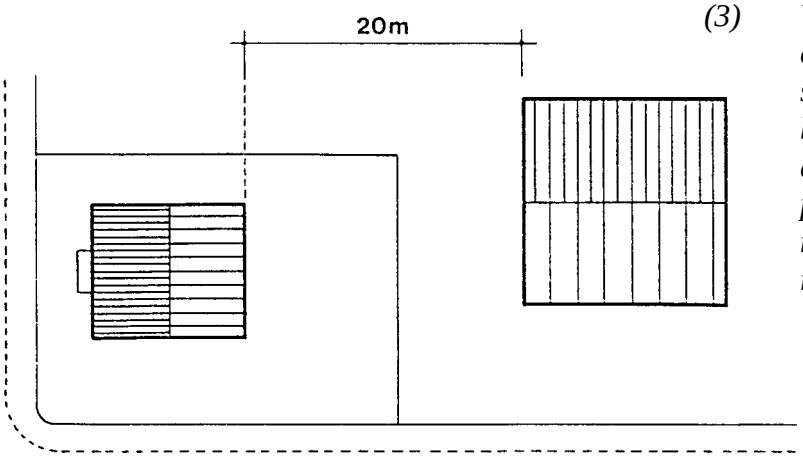

(3) Where the rear of one dwelling faces the side of a three storey block of flats (which does not contain principal windows) a minimum of 20m is required

2.12 Finally, the position of a building on a plot should also take into consideration the position of buildings on adjoining plots either side. Dwellings should not project significantly beyond the rear of adjoining dwellings particularly if they are close to side boundaries since this would be overbearing and lead to loss of light and outlook. A general "rule of thumb" guide is that there should be no development beyond a 45 degree area, measured from the nearest rear windows of the neighbouring dwellings.

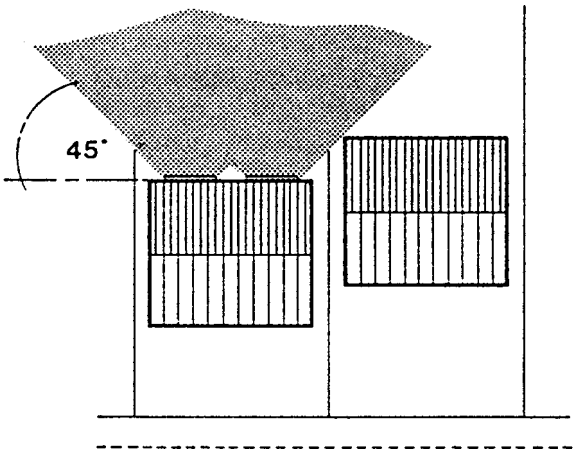

Adjoining Buildings

Dwellings should not project significantly beyond the rear of adjoining dwellings.

FRONT BOUNDARIES

2.13 Whilst the requirement of 22m between facing principal windows, to retain privacy, is essential at the rear it is not usually expected that the same degree of privacy would be provided at the front of a dwelling.

2.14 In the case of infill developments the distance between a dwelling and the front of a plot should usually adhere approximately to the existing "building line". However, where an integral or attached garage is to be provided, the requirement for a 6m hardstanding (see section 4) may determine the distance of the dwelling from the front boundary. Where there is no established building line, and a hardstanding is not required, a minimum of 3m will be required between the dwelling and the front of the plot. Since front garden walls/ fences are usually no more than 1m high this would ensure adequate daylight to front rooms. The minimum of 3m proposed above would be suitable for an urban "street" development and would allow the maximisation of private rear amenity areas. However, in suburban areas and on larger plots, it would be desirable to have deeper front gardens of at least 6m to give a greater sense of space, in keeping with the existing character of an area.

EXTENSIONS

2.15 Houses and bungalows should usually be designed so that it would be possible for extensions to be added without detriment to adjoining properties. Where this is not possible "permitted development" rights will be removed by condition. The Council's Development Control Standard No 3 "Extensions and Alterations to Dwellings" gives information on the type of extension that would normally be acceptable.

3.0 **AMENITY SPACE**

3.1 The rear garden of a dwelling provides a private outdoor amenity space for: the cultivation of plants and vegetables; children to play; washing to be dried, and hobbies pursued, as well as providing an attractive setting for a dwelling. New dwellings should normally have a rear garden sufficiently large to allow for the possibility of adding small extensions without reducing the garden unacceptably. Flats will also require adequate amenity areas. The size and type of amenity space required should be related to the size of a dwelling/flat and whether it is suitable for family occupation. It will also be affected by the character of the area. The main criteria for assessing amenity space are their depth, area, privacy and daylight.

DEPTH

3.2 A minimum rear garden depth for two storey houses is derived from the minimum distance required between the rears of dwellings of 22m, (see 2.7 above). The minimum garden depth is, therefore, usually 11m. However, unless there is at least 28m between the rear of dwellings backing onto each other "permitted development" rights will be removed by condition. It should be noted however that where the rear of one dwelling backs onto the side of another, 14m is required between the dwellings, and this may necessitate a garden of over 11m depth. (See 2.11 above).

Garden Depth

The minimum garden depth is 11m.

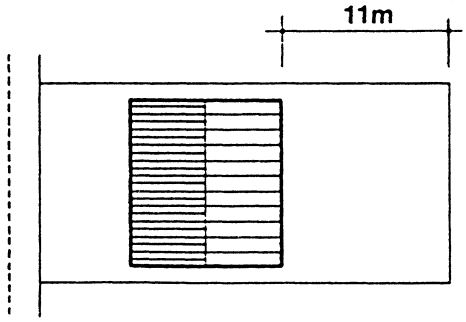

3.3 In some cases a plot may be shaped such that it has very little rear garden but instead a large side garden. This may be acceptable in some circumstances providing that there is at least 22m between any facing principal windows and the side garden is enclosed by a screen wall to give adequate privacy, and has a width of at least 11m.

There is no set standard for garden depth of flats.

AREA

3.4 The area required for a rear garden depends on the size of dwelling/flat that it is proposed to serve. The table below summarises the Council's requirements for dwellings.

Dwelling Type	Garden Area Required (Square Metres)
2 Bed Terraced Dwelling	50
3 Bed Terraced Dwelling	65
Small Semi-Detached and Detached Dwelling (Up to 3 bedrooms or 120m^2)	85
Large Semi-Detached and Detached Dwelling (4 bedrooms or over 120m^2)	100

3.5 It should be noted that the rear garden size for dwellings is calculated by multiplying the depth from the house to the rear boundary by the width of the garden (assuming a rectangular garden). However, where a side garden is over 3m in width, and is enclosed by screen walls to ensure privacy, it can be added to the rear garden area.

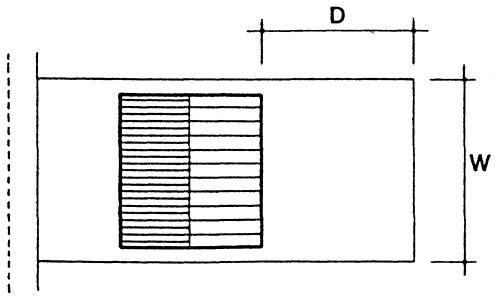

Garden Area

Area = D x W

Garden Area with Side Garden

Where a side garden is over 3m wide and enclosed by screen walls it can be included in area.

Area = (D x W) + (d x w)

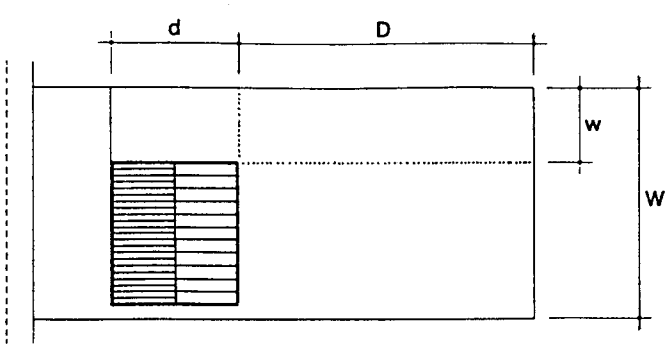

3.6 For flat developments amenity areas should be provided which are equivalent to a minimum of 20 square metres per flat. This can be either in the form of communal areas or individual amenity areas. For ground floor flats it is generally advisable to provide for individual amenity areas. For an area to be included as an amenity area it must be a usable space (i.e. dustbin enclosures etc would not be included) and should be at least 3m in width.

3.7 In urban developments it would be unusual for a rear garden to be completely private. However, the distances required between principal facing windows (see 2.4 above) will help to reduce problems of overlooking of garden areas. It may be possible in designing new housing to incorporate screen walls or "courtyard" designs where at least part of the rear garden is screened. In addition some landscaping measures would help to ensure greater privacy (see 5).

DAYLIGHT

3.8 It is important that rear garden areas are not unduly overshadowed by adjoining properties. The distance required between facing principal windows will usually ensure there is no problem with properties to the rear. Overshadowing of gardens from adjoining properties to the side can be minimised by maintaining a rear "building line". Dwellings will not usually be allowed therefore that project significantly beyond the rear of adjoining dwellings (see 2.12).

4.0 ACCESS AND PARKING PROVISION

4.1 All new residential developments will be required to have an adequate access and to make sufficient parking provision. All developments should therefore accord with the Council's Development Control Standard No 1 "Car Parking Standards". The parking standards are summarised in the appendix.

4.2 Where garages are to be provided these should have a hardstanding of at least 6m in length in order to ensure that cars waiting to enter the garage will not block the highway (pavement and road) and to allow room for cleaning and maintenance. A single garage with hardstanding in front will count as two parking spaces.

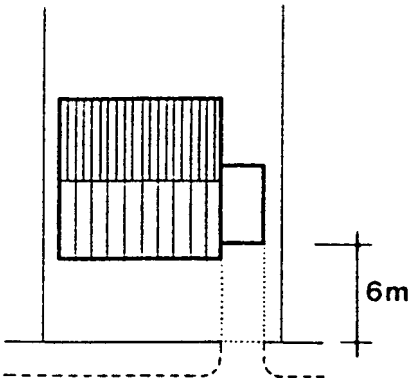

Garage Hardstandings

Should be at least 6m.

4.3 On corner plots a garage should usually be situated as far from the corner as possible in the interests of highway safety. In some cases therefore a garage adjacent to the house would be unacceptable and it may be necessary to locate it at the rear of the garden instead.

Location of Garage

On corner plots a garage adjacent to the house may be unacceptable.

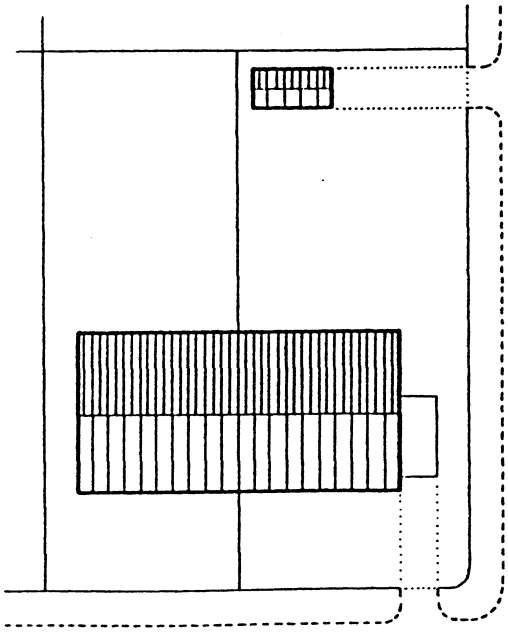

4.4 The visual impact of parking areas is an important consideration. Parking should generally be provided in the curtilage of the dwelling and garages should generally be located to the side of dwellings or be integral. Parking and garage compounds will not usually be acceptable unless they are readily accessible to the dwellings to be served, otherwise an on-street parking problem is likely to occur. They also need to have good surveillance to avoid security problems. Garage compounds should usually be screened from the fronts of dwellings but where this is not possible they should be carefully designed and of good quality materials with adequate arrangements for future maintenance. Front gardens which consist entirely of parking bays are not usually visually acceptable.

5.0 **LANDSCAPING**

5.1 New residential developments should retain important existing landscape features such as healthy trees or established hedges and provide new planting where appropriate. These can often help to assimilate and integrate proposed developments with the existing character of an area and make an important contribution to the appearance and character of an area. Reference should be made to the Council's Design Bulletin No 1 "Trees and Landscaping".

PUBLIC SPACES

5.2 Where public open spaces are to be provided as part of an estate development these will be required to be landscaped to a high standard and should be subject to a legal agreement requiring the transfer of the ownership of the space to the Local Authority and the payment of a commuted sum for future maintenance.

PRIVATE SPACES

5.3 Amenity areas in flat developments should be landscaped to provide a pleasant setting. In housing schemes larger structural elements of landscaping (such as any earthworks required and tree planting) should be included at the outset and will be required by condition. In larger developments space should be specifically set aside for planting groups of trees which can have a greater impact.

FOR FURTHER INFORMATION OR ADVICE PLEASE CONTACT THE DEVELOPMENT CONTROL SECTION OF THE PLANNING AND POLICY DIVISION

APPENDIX

STANDARDS FOR PARKING AND SERVICING IN RELATION TO RESIDENTIAL DEVELOPMENT

DWELLING TYPE	SPECIFIC REQUIREMENTS	TOTAL CAR PARKING PROVISION
SINGLE HOUSE AND ESTATE DEVELOPMENT (where development does not exceed 15 units) *Smaller house sizes*	For each dwelling of 1, 2 or 3 bedrooms and providing that dwelling does not exceed 120 sq.m. gross floor area (excluding integral garage) :- 1 GARAGE OR CAR SPACE and 1 SPACE FOR VISITORS to be provided in curtilage where possible and in any case be in a convenient position which will encourage use.	2
SINGLE HOUSE AND ESTATE DEVELOPMENT (where development does not exceed 15 units) *larger house sizes*	For each dwelling with 4 or more bedrooms or for each dwelling exceeding 120sq.m. gross floor area :- 2 GARAGES OR CAR SPACES and 1 SPACE FOR VISITORS to be provided in curtilage where possible and in any case be a convenient position which will encourage use.	3
ESTATE DEVELOPMENT WITH 16 OR MORE UNITS	AN ADDITIONAL 0.2 SPACES/ DWELLING REQUIRED FOR VISITORS AND SERVICES VEHICLES	
smaller house sizes	as specified above	2.2
larger house sizes	as specified above	3.2

DWELLING TYPE	SPECIFIC REQUIREMENTS	TOTAL CAR PARKING PROVISION
FLATS WITH 3 OR MORE HABITABLE ROOMS	1 CAR SPACE and 0.7 CAR SPACES FOR VISITORS AND SERVICE VEHICLES (to be provided within the layout near to dwellings).	1.7
FLATS AND BEDSITTERS WITH 2 OR LESS HABITABLE ROOMS (not restricted to the elderly)	1 CAR SPACE AND 0.2 CAR SPACES FOR VISITORS AND SERVICE VEHICLES (to be provided within the layout near to dwellings).	1.2
HOUSES IN MULTIPLE OCCUPATION (Properties providing residential accommodation in the form of non self-contained bedsitting rooms or flats, with all occupants sharing to some degree facilities such as kitchens, bathrooms and toilets. This excludes all self-contained accommodation and communal accommodation such as rest homes).	0.5 CAR SPACE PER ROOM/UNIT	0.5
SHELTERED ACCOMMODATION AND FLATS FOR THE ELDERLY (i) Where occupation is restricted by legal agreement to persons of state pensionable age or over.	(a) for each flat with 2 or less habitable rooms:- 0.3 CAR SPACES and 0.2 CAR SPACES FOR VISITORS AND SERVICE VEHICLES	0.5
	For each resident staff:-	1
	(b) For each flat with more than 2 habitable rooms :- 0.55 CAR SPACES AND 0.2 CAR SPACES FOR VISITORS AND SERVICE VEHICLES	0.75

DWELLING TYPE	SPECIFIC REQUIREMENTS	TOTAL CAR PARKING PROVISION
	For each resident staff :-	1
(ii) Where occupation is by legal agreement to persons of 55 or over	1 CAR SPACE AND 0.2 CAR SPACES FOR VISITORS AND SERVICE VEHICLES	1.2
	For each resident staff :-	1

NOTE

These standards will apply to sheltered accommodation and flats for the elderly only where occupancy is restricted by legal agreement to persons of the age specified. Where no such agreement exists the development will be expected to meet the requirements for normal residential development.

HOMES FOR THE ELDERLY (including Nursing Homes)	1 CAR SPACE FOR EVERY 20 RESIDENTS OR INCREMENT OF UP TO 20 RESIDENTS
Private and Local Authority requiring registration under the Registered Homes Act 1984 i.e. providing personal care for more than 3 beds.	1 CAR SPACE FOR VISITORS AT THE RATIO OF 1 SPACE FOR 8 RESIDENTS OR INCREMENTS OF UP TO 8 RESIDENTS ADDITIONAL CAR SPACE FOR STAFF BASED ON A RATE OF ONE SPACE PER FIVE RESIDENTS (all to be provided within the layout near to dwellings) SPACE FOR SERVICE VEHICLES AS REQUIRED
COMMUNITY BLOCKS AND HOMES FOR THE MENTALLY HANDICAPPED	1 CAR SPACE FOR EVERY 20 RESIDENTS OR INCREMENT OF 20 RESIDENTS ADDITIONAL CAR SPACE FOR STAFF BASED ON A RATE OF ONE SPACE PER 2.5 RESIDENTS VISITORS - DUAL USE WITH NON-RESIDENT STAFF SPACES.

DWELLING TYPE	SPECIFIC REQUIREMENTS	TOTAL CAR PARKING PROVISION
COMMUNITY HOMES FOR THE PHYSICALLY HANDICAPPED	1 CAR SPACE FOR EVERY 4 bedrooms (usually for Invacars) TO ALSO CATER FOR VISITORS AND STAFF (all to be provided within the layout near to dwellings) SPACES FOR SERVICE VEHICLES AS REQUIRED	
HOSTELS FOR STUDENTS	1 CAR SPACE FOR RESIDENTS AT THE RATIO OF 1 SPACE FOR EVERY 4 RESIDENTS 1 CAR SPACE FOR VISITORS AT THE RATIO OF 1 SPACE FOR EVERY 20 RESIDENTS SPACES FOR SERVICE VEHICLES AS REQUIRED	

NOTE:

The number of spaces calculated shall be rounded to the nearest whole number.