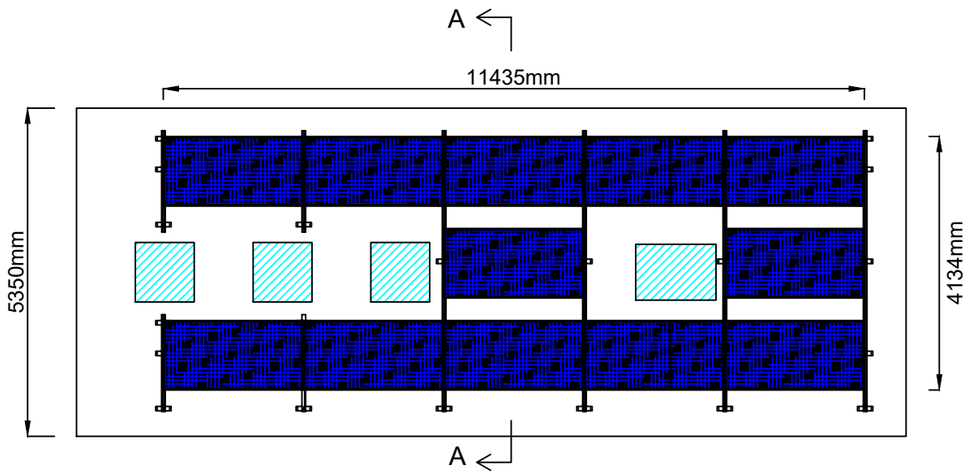

Plan View

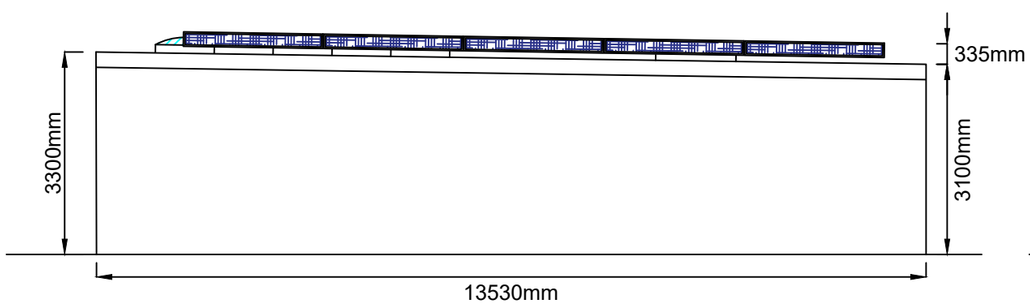

South East Elevation

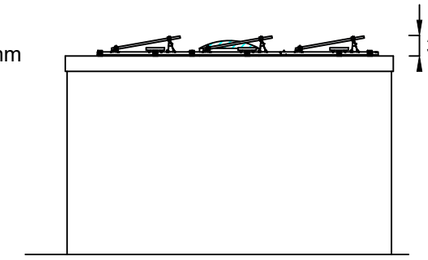

Section A - A

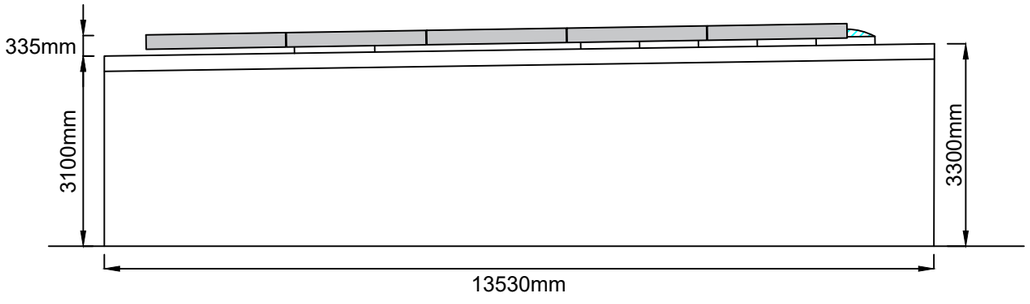

North West Elevation

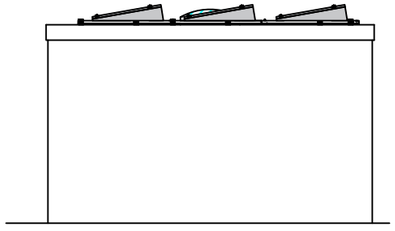

South West Elevation

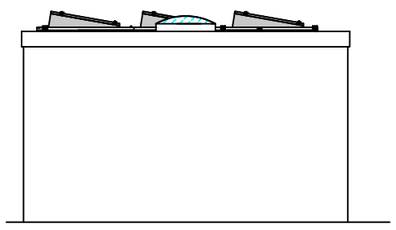

North East Elevation



PDP SERVICES
Electrical Plumbing Fire Solar Renewables Construction
Unit 3,
Sovereign Business Park
Albert Drive
Burgess Hill
West Sussex
RH15 9TY
01444 480444
www.pdp.services

Rev.	Reason.	Date.

Scale	1:100 @ A3
Drawn By	MM
Date	14/03/2023

126 Old Shoreham Road
Shoreham-by-Sea
West Sussex
BN43 5TE

2427-22-1 Dimensions