Existing

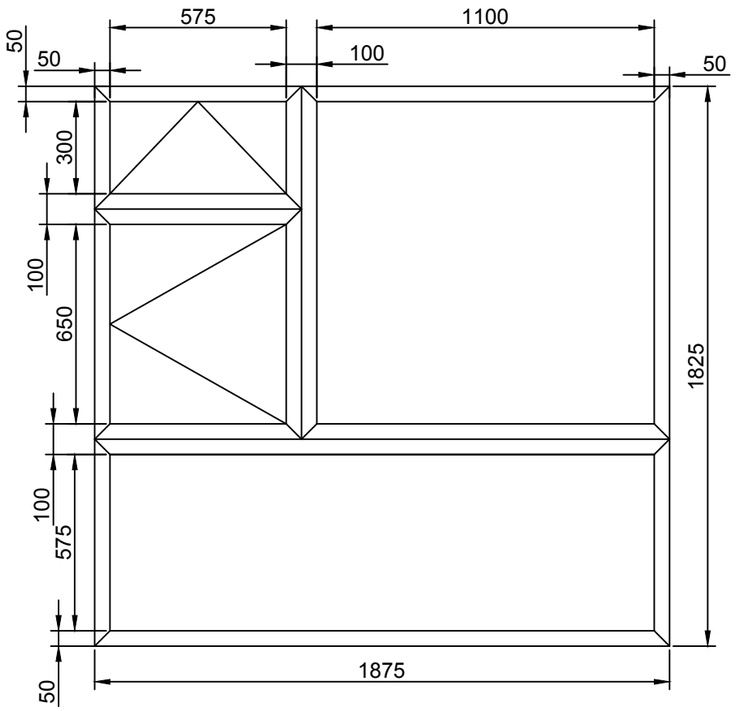

Proposed

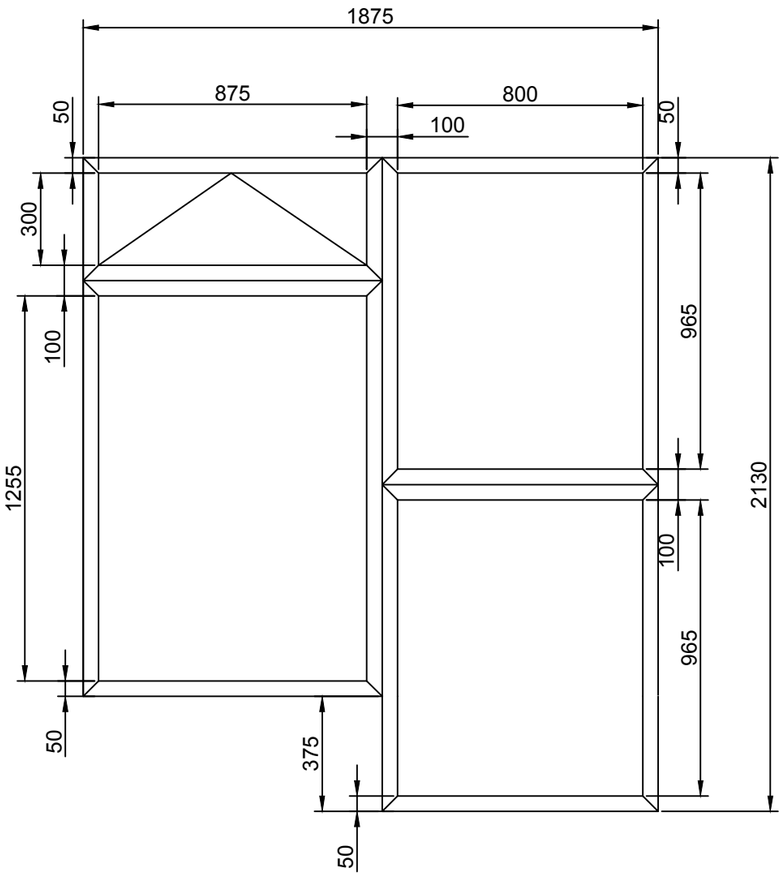

South Elevation
Lounge window

0 20 40

Mr Graham Clark
2 Sylvan Road
Sompting
Lancing
BN15 0BT

External Access

Scale: 1:20
Date: August 2019
Drawn: Stephanie McCarthy

ADUR & WORTHING HOME IMPROVEMENT ASSISTANCE
ADUR & WORTHING COUNCILS
PORTLAND HOUSE
RICHMOND ROAD
WORTHING
BN11 1HS