T.P. OFFICE COPY

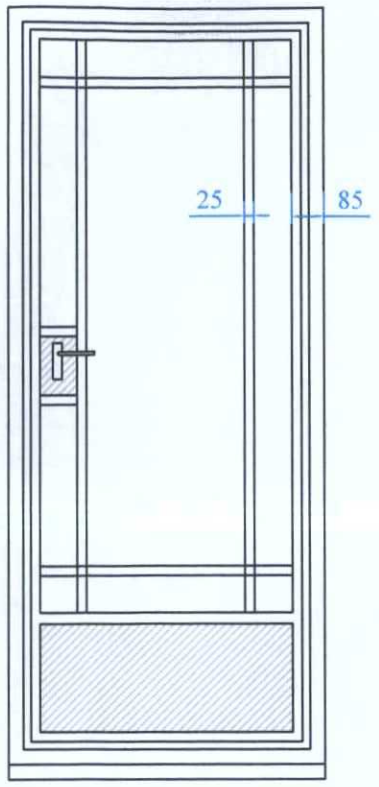

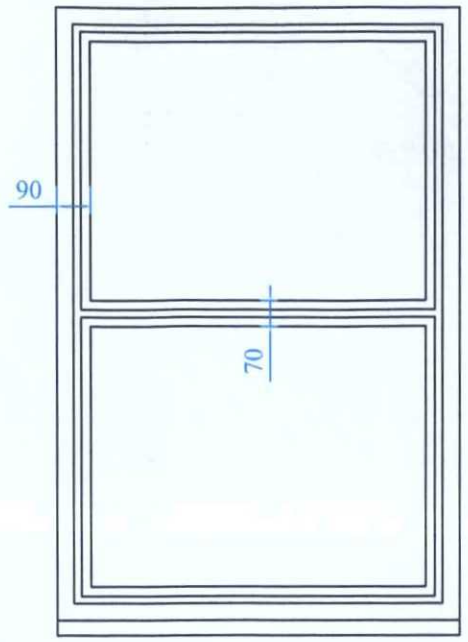

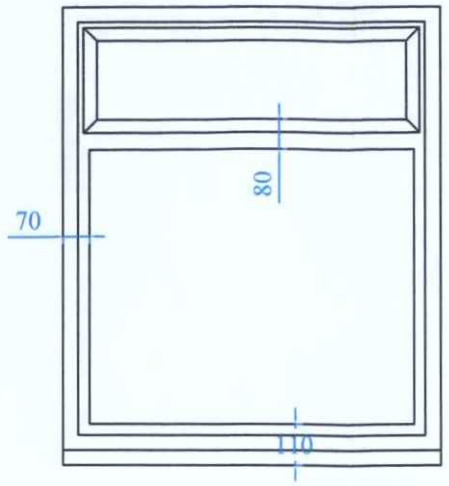

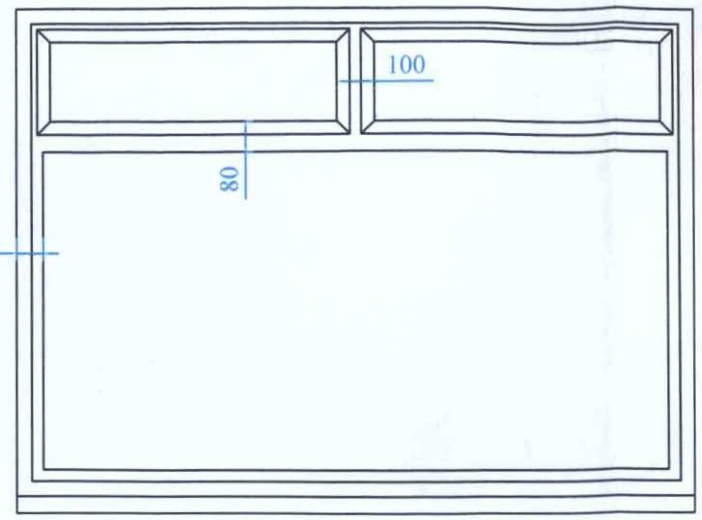

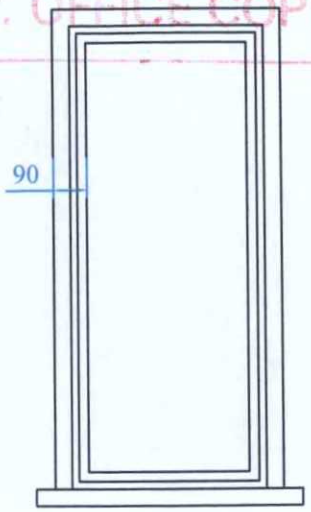

EXISTING

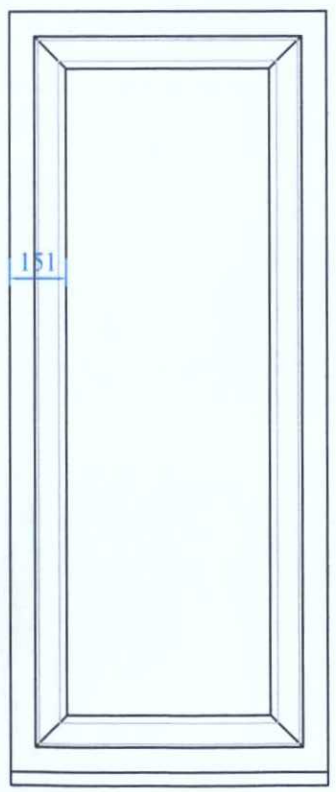

Dining room door west

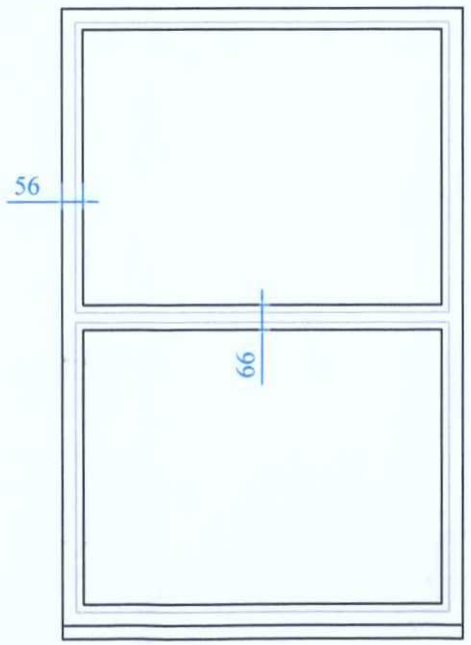

Landing south

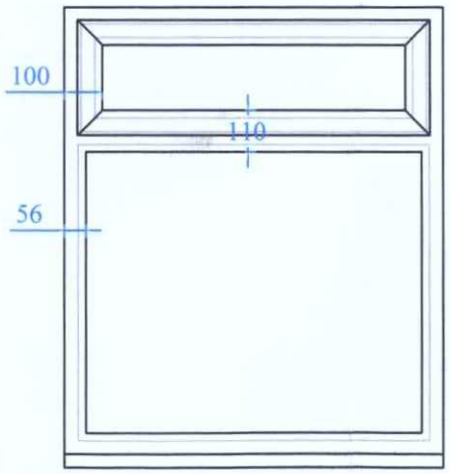

Kitchen & Bathroom

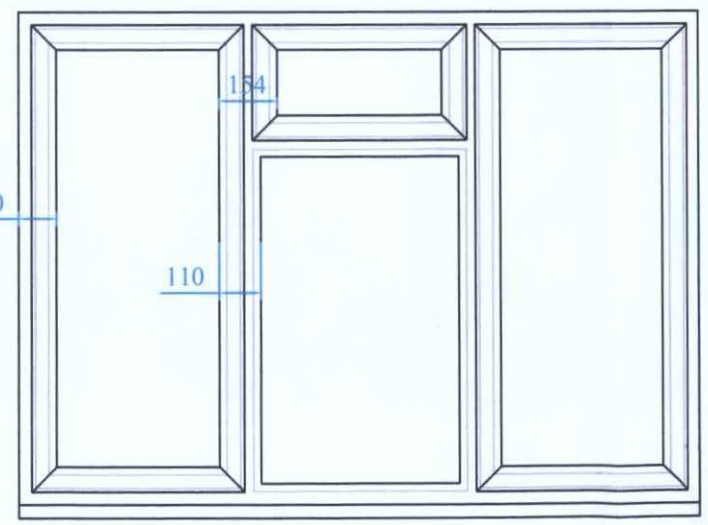

Bedrooms east

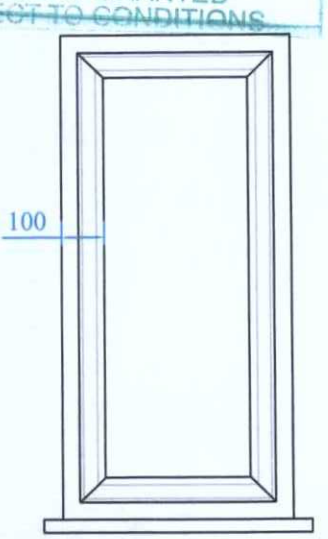

Hall(g floor) west

BOROUGH OF WORTHING
DEPOSITED 30.10.07
T.P. / E.F. No.
WB/ 07/1346/FUL
WORTHING BOROUGH COUNCIL
17 DEC 2007
CONSENT GRANTED
SUBJECT TO CONDITIONS

PROPOSED

Plan no. 101/07/09
Sheet 2 of 10
Scale 1/20
Revision 00

Proposed replacement fenestration
at first floor flat
98A Grand Avenue Worthing
West Sussex BN11 5BH
for
Mrs King

Anthony R Budd MRICS FASI FCIOB Chartered Surveyor The Stables Lidsey Barns Lidsey West Sussex PO22 9QS Phone: 01243 543382 Fax: 01243 544330 Mobile 07860 316486 email: abudd@btclick.com

T.P. OFFICE COPY

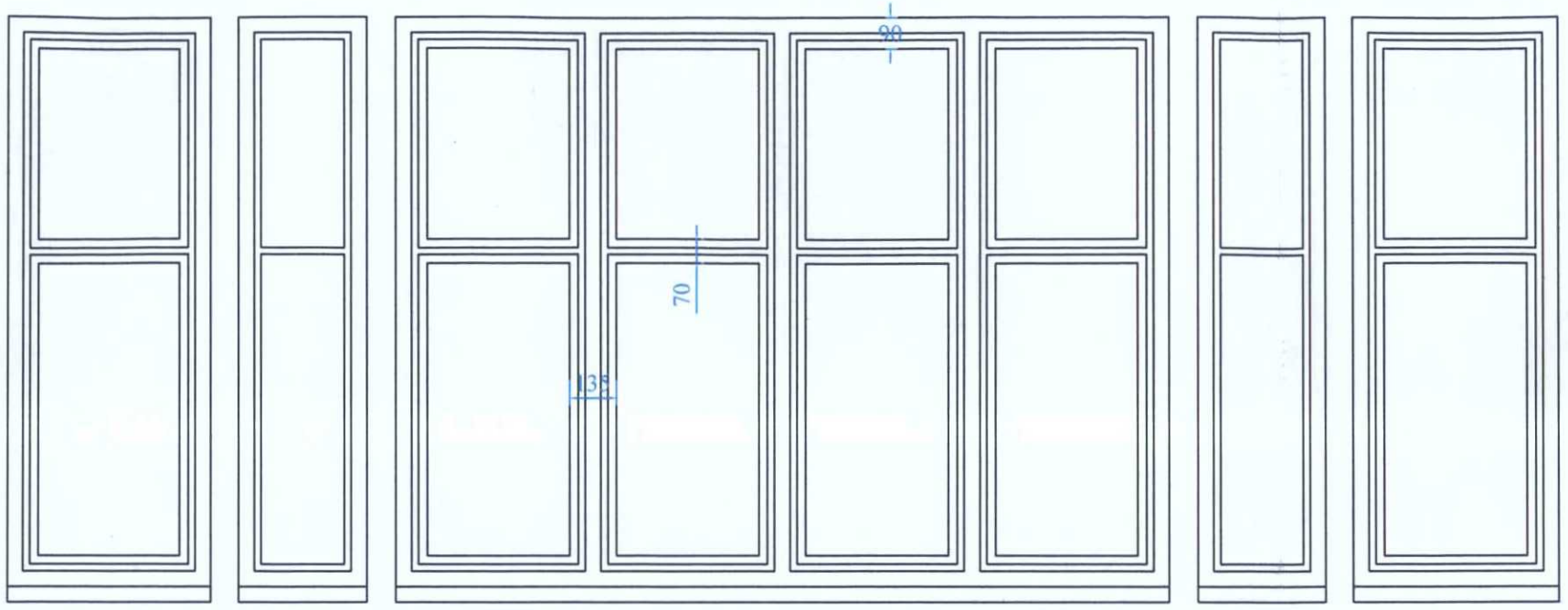

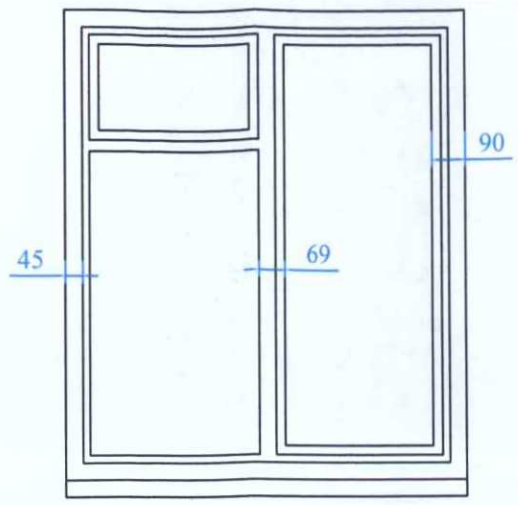

BOROUGH OF WORTHING
DEPOSITED 3/9/08
TP. REF. No.
WB/ 07/1346/FUL

EXISTING

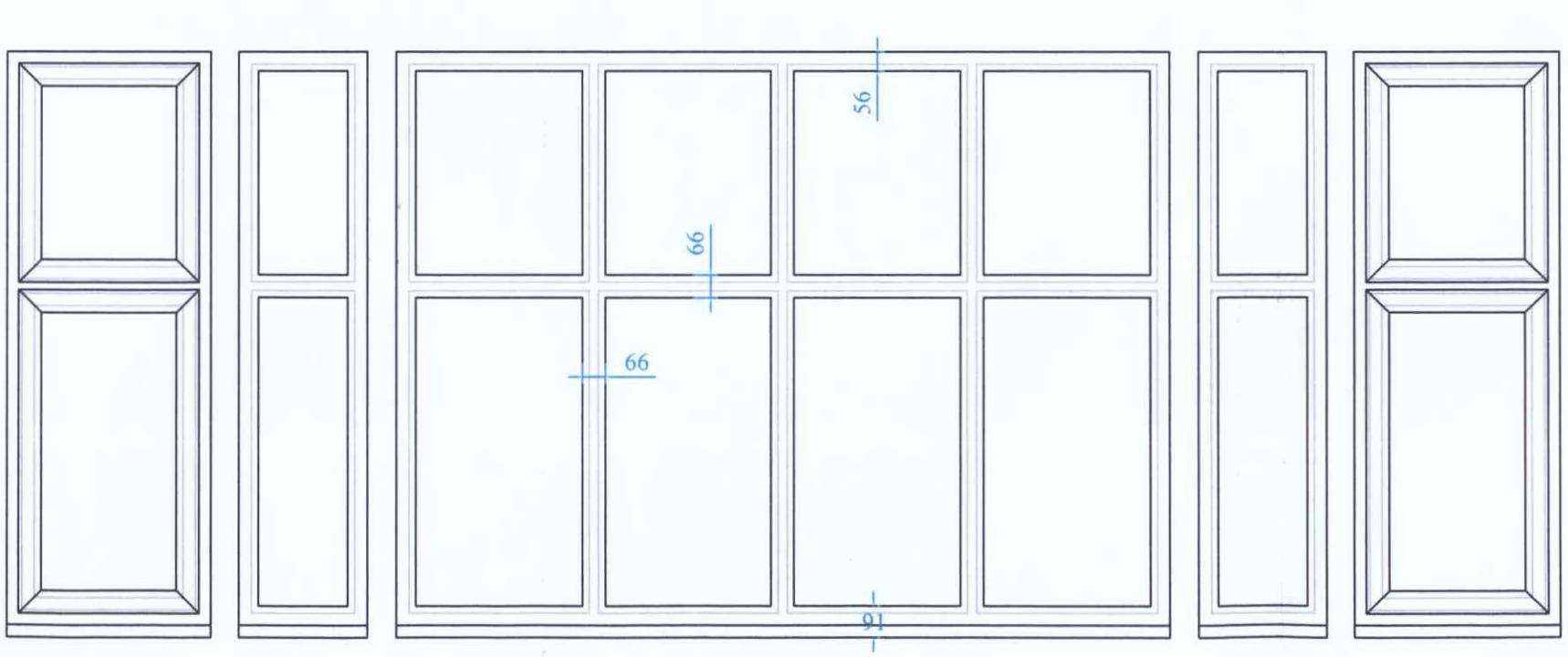

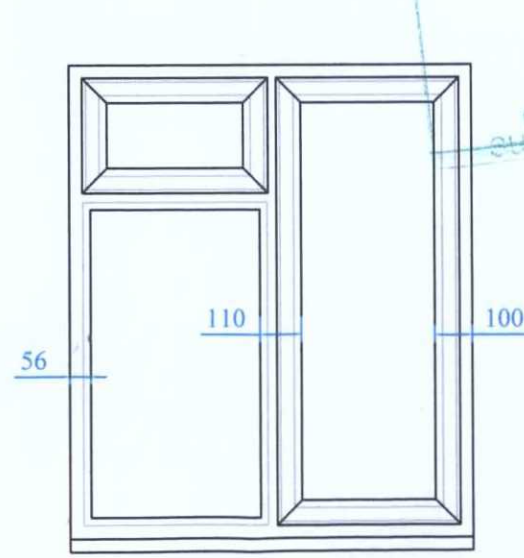

WORTHING BOROUGH COUNCIL
17 DEC 2007
CONSENT GRANTED
SUBJECT TO CONDITIONS

Front bay west

Dining room south

PROPOSED

Plan no. 101/07/09
Sheet 1 of 10
Scale 1/20
Revision 00

Proposed replacement fenestration
at first floor flat
98A Grand Avenue Worthing
West Sussex BN11 5BH
for
Mrs King

Anthony R Budd MRICS FASI FCIOB Chartered Surveyor The Stables Lidsey Barns Lidsey West Sussex PO22 9QS Phone: 01243 543382 Fax: 01243 544330 Mobile 07860 316486 email: abudd@btclick.com

T.P. OFFICE COPY

BOROUGH OF WORTHING
DEPOSITED 3/1/07
TP. REF. No.
WB/ 07 / 1346/full



© Crown Copyright 2007. All rights reserved. Licence number 100035135

Block plan

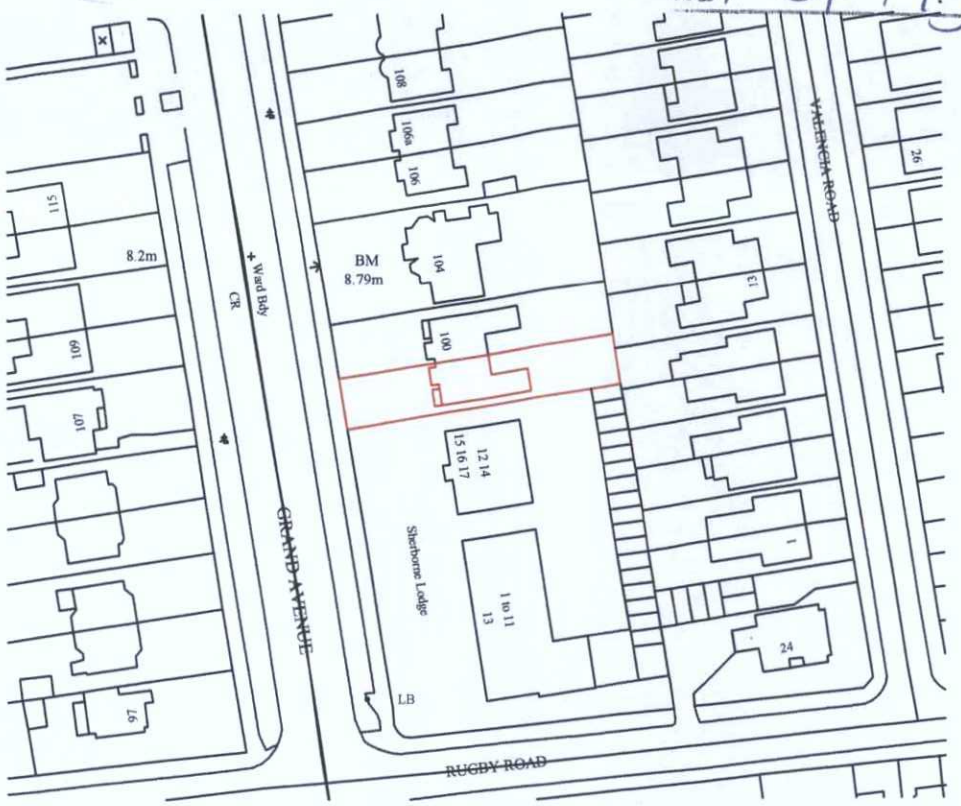

© Crown Copyright 2007. All rights reserved. Licence number 100020449

Location plan

Plan no. 101/07/09
Sheet 3 of 10
Scale 1/500 1/1250
Revision 00

Proposed replacement fenestration
at first floor flat
98A Grand Avenue Worthing
West Sussex BN11 5BH
for
Mrs King

Anthony R Budd MRICS FASI FCIOB Chartered Surveyor The Stables Lidsey Barns Lidsey West Sussex PO22 9QS Phone: 01243 543382 Fax: 01243 544330 Mobile 07860 316486 email: abudd@btclick.com