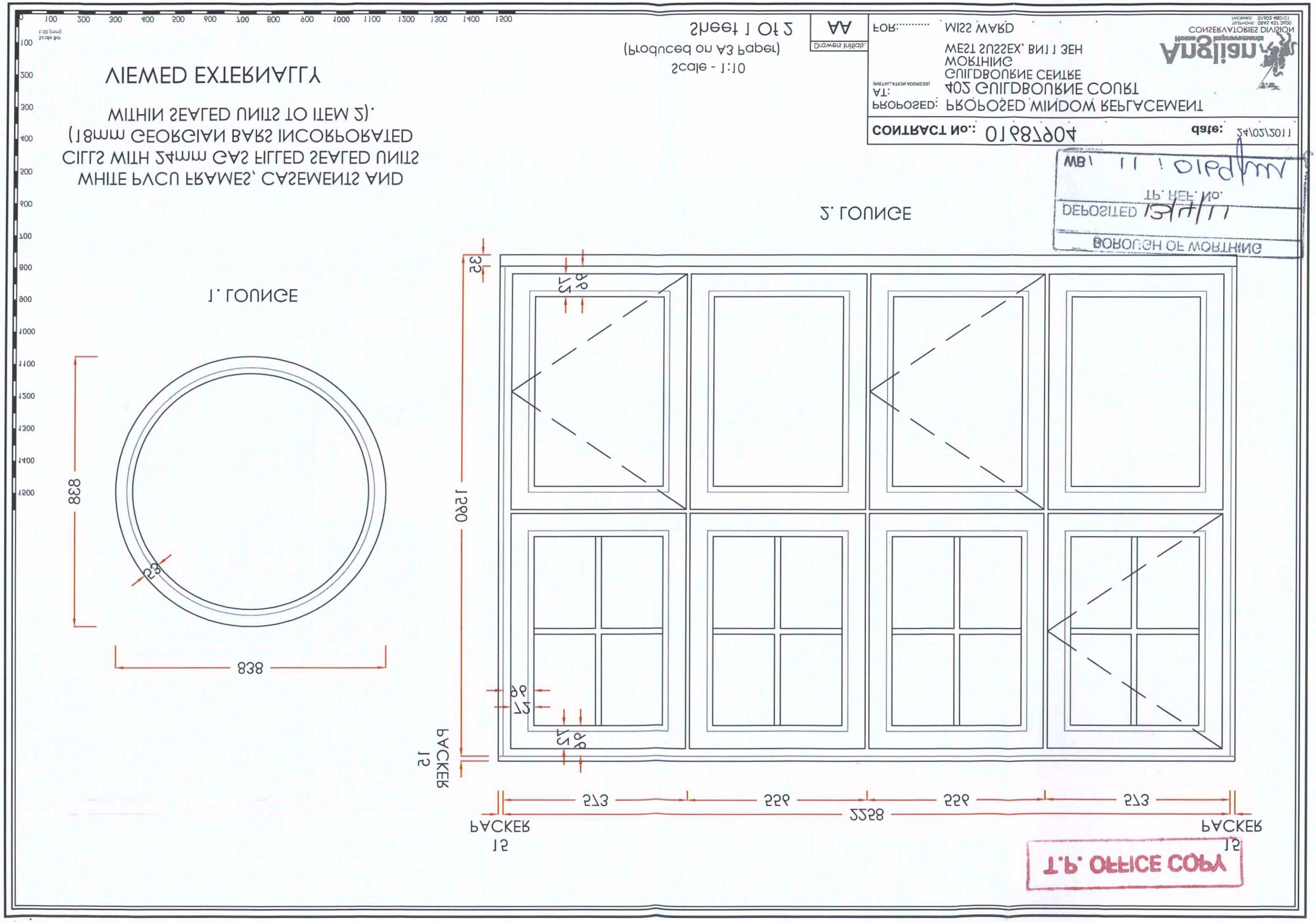

VIEWED EXTERNALLY
WHITE PVCU FRAMES, CASEMENTS AND
CILLS WITH 24mm GAS FILLED SEALED UNITS
(18mm GEORGIAN BARS INCORPORATED
WITHIN SEALED UNITS TO ITEM 2).
Scale - 1:10
(Produced on A3 Paper)
Sheet 1 Of 2
AA
Drawers Initials
FOR: MISS WARD
WEST SUSSEX, BN11 3EH
WORTHING
GUILDBOURNE CENTRE
AT: 402 GUILDBOURNE COURT
(INSTALLATION ADDRESS)
PROPOSED: PROPOSED WINDOW REPLACEMENT
CONTRACT No.: 01687904
date: 24/02/2011
CONSERVATORIES DIVISION
Home Improvements
DEPOSITED 13/4/11
BOROUGH OF WORTHING
1. LOUNGE
2. LOUNGE
838
838
23
1290
35
96
27
96
27
96
27
96
PACKER 15
573
555
555
573
2258
PACKER 15
PACKER 15
T.P. OFFICE COPY

Sheet 2 Of 2

(Produced on A3 Paper)

Scale - 1:10

AA

Drawers Initials

FOR: MISS MARD

WEST SUSSEX, BN11 3EH
WORTHING
GUILDBOURNE CENTRE
AT: (INSTALLATION ADDRESS) 402 GUILDBOURNE COURT

PROPOSED: PROPOSED WINDOW REPLACEMENT

CONTRACT No.: 01687904

date: 24/02/2011

Anglian Home Improvements
CONSERVATORIES DIVISION
TELEPHONE: 0845 437 3400
FACSIMILE: 01903 480101

WHITE PVCU FRAME, CASEMENT AND CILL
WITH 24mm GAS FILLED SEALED UNITS.

VIEWED EXTERNALLY

3. MUSIC ROOM

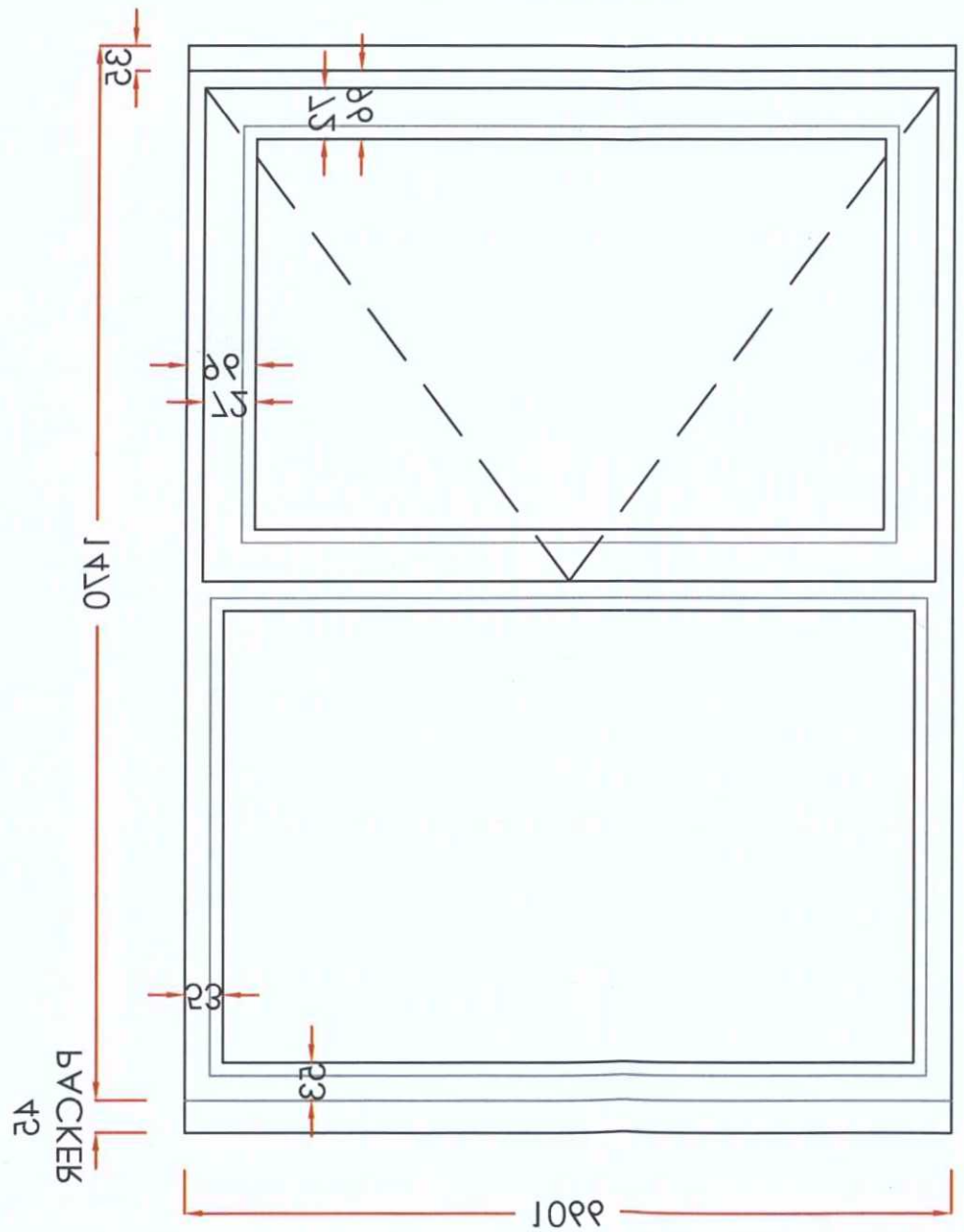

WB 11 1019
TP. REF. No.
DEPOSITED 13/11/11
BOROUGH OF WORTHING

T.P. OFFICE COPY