The contractor is responsible for setting out and must check all levels and dimensions prior to work being put in hand.

This drawing may be scaled for planning purposes only. For construction purposes only written dimensions are to be taken in respect of this project.

Rev Date Comment

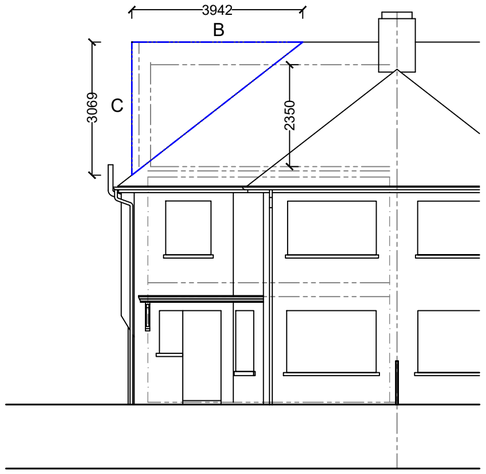

Proposed North (Front) Elevation 1:100

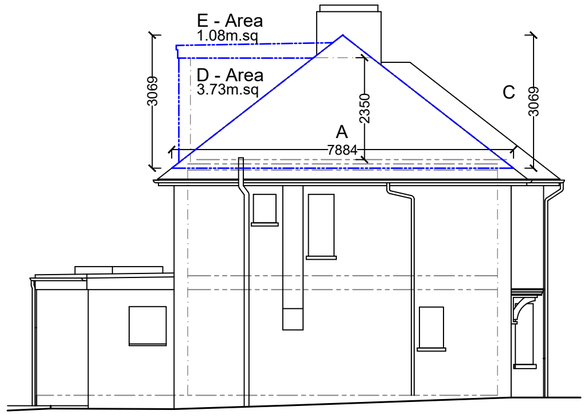

Proposed East (Side) Elevation 1:100

0 1 2 3 4 5 6 7 8 9 10
Metres 1:100 Scale Bar

Key:-

- Indicates existing walls.
- Indicates new / infill masonry walls.
- Indicates line of walls to be removed.
- Indicates line of structure over.
- Indicates line of structure under.

Volume of Proposed Roof Additions:-

Maximum additional roof volume = 50m.cu

Hip To Gable:-
Volume of = $\frac{A \times B \times C}{6}$
Volume = $\frac{7.88m \times 3.94m \times 3.07m}{6}$ = 15.89m.cu

Rear Dormer:-
Maximum 50m.cu - Hip to Gable 15.89m.cu = 34.11m.cu

Volume of Dormer = Area x Length
Area (D) = 3.73m.cu x 5.82m maximum = 21.71m.cu

Volume of Dormer Roof (E) = Area x Length
Area (E) = 1.08m.cu x 5.94m maximum = 6.42m.cu

Total Volume Of Dormer = 28.13m.cu +
Total Volume of Gable = 15.89m.cu

Total Additional Volume of Proposed Roof = 44.02m.cu

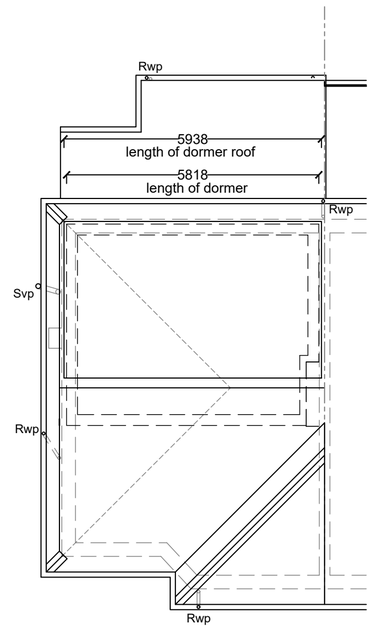

Proposed Roof Plan 1:100

J H Pfeiffer
BA Hons Dip Arch
Architecture & Design

76 Brougham Road
Worthing, West Sussex, BN11 2NU
Tel: 07776 253076
E-mail: heidipfeiffer@hotmail.com

Project:-
Application for Lawful Development Certificate for Proposed Hip to Gable Loft Conversion with Rear Dormer at 16 Leighton Avenue, Worthing.

Client:-
Mr & Mrs Hobden

Address:-
16 Leighton Avenue, Worthing,
West Sussex, BN14 8QP

Drawing Title:-
Loft Conversion - Volume Calculations

Scale:-
1:100 @ A2

Date:-
Feb 2025

Drawing No:-
1486 / VC01

Rev:-