

McDRIVE LOGO BOX
IS ADJUSTABLE AND POINTS
TO THE DRIVE-THRU LANE.

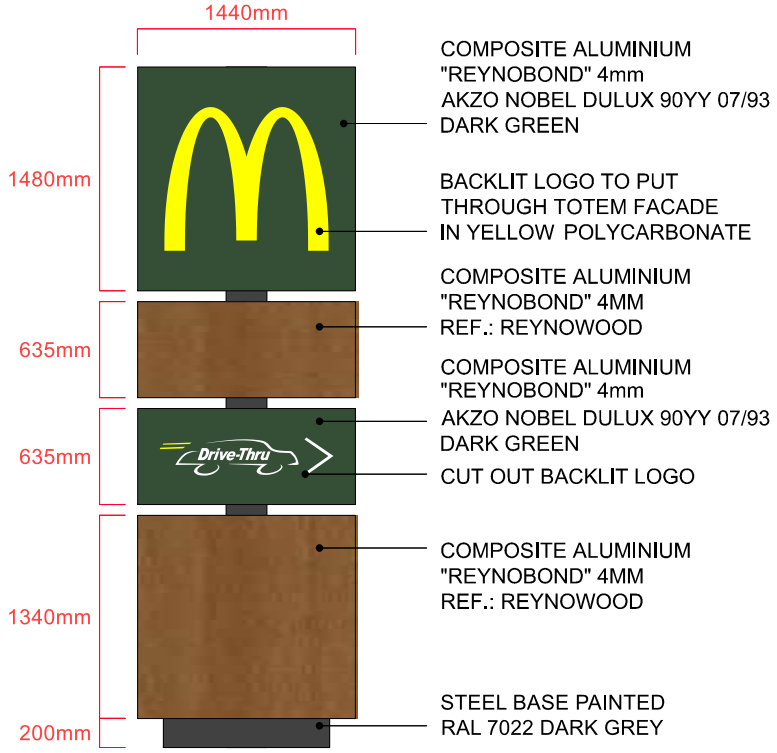

70mm gaps between panels

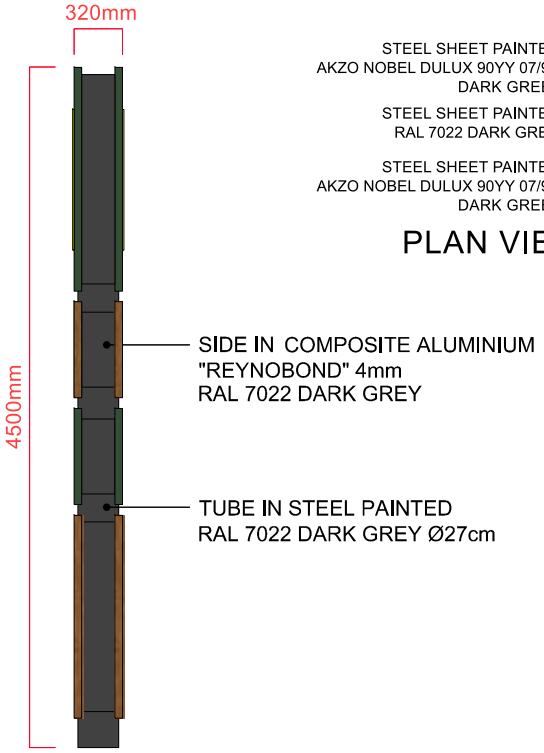

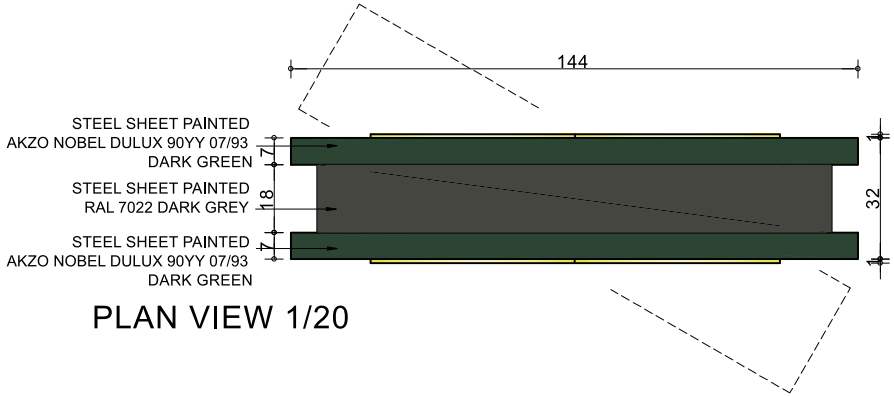

PLAN VIEW 1/20

