10 Freshfields Close, Lancing

Lawful Development Certificate application

0490-22-12

Volume Calculations

Rear dormer

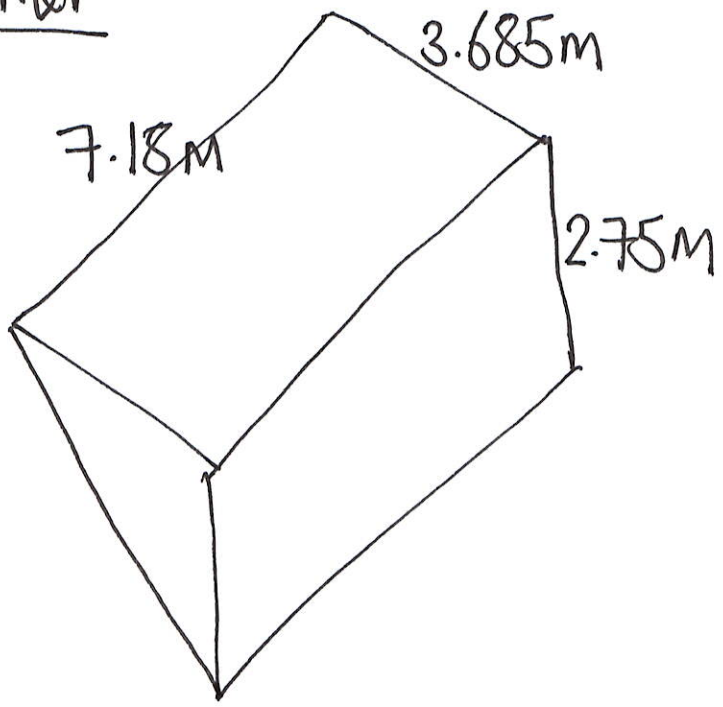

Volume = $7.18 \times 3.685 \times 2.75 \times \frac{1}{2} = 36.38\ M^3$

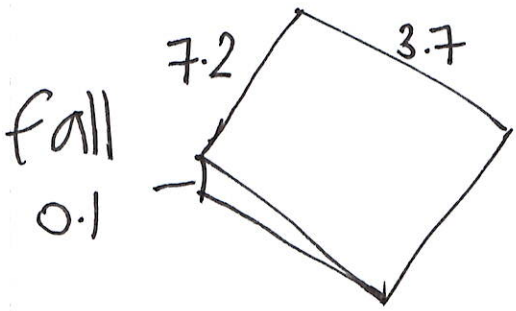

Volume = $0.1 \times 7.2 \times 3.7 \times \frac{1}{2} = 1.33\ M^3$

∴ volume of dormer =

dormer	36.38
fall	1.33

Total volume = 37.71 M^3

MM 06/04/2022