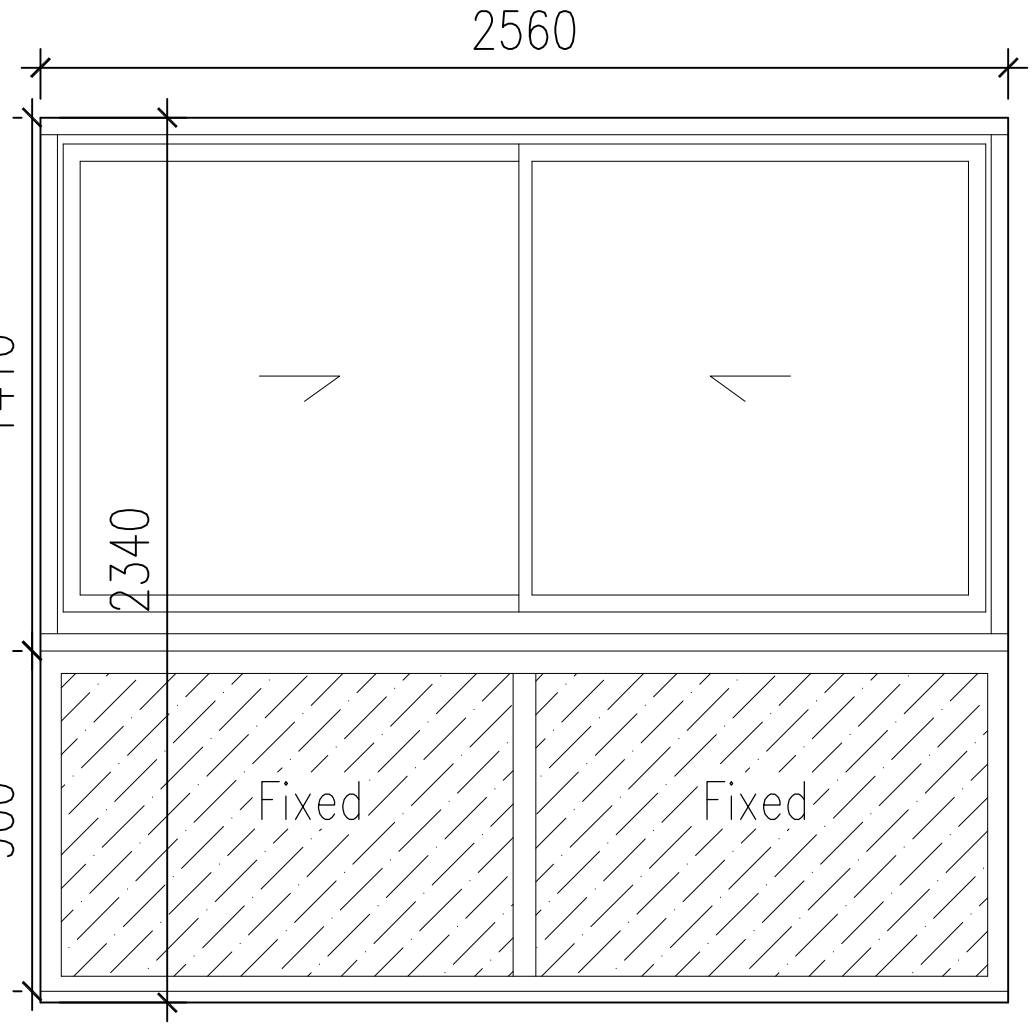

W1

Living room window proposed

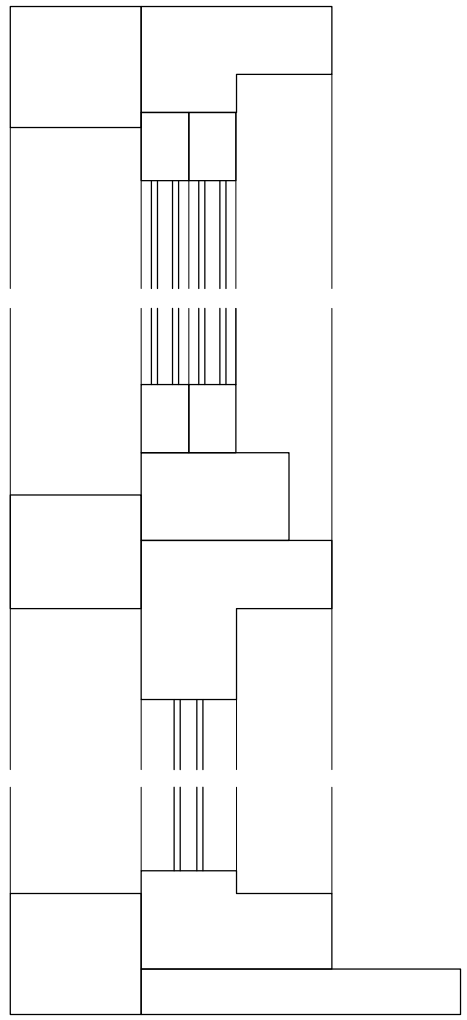

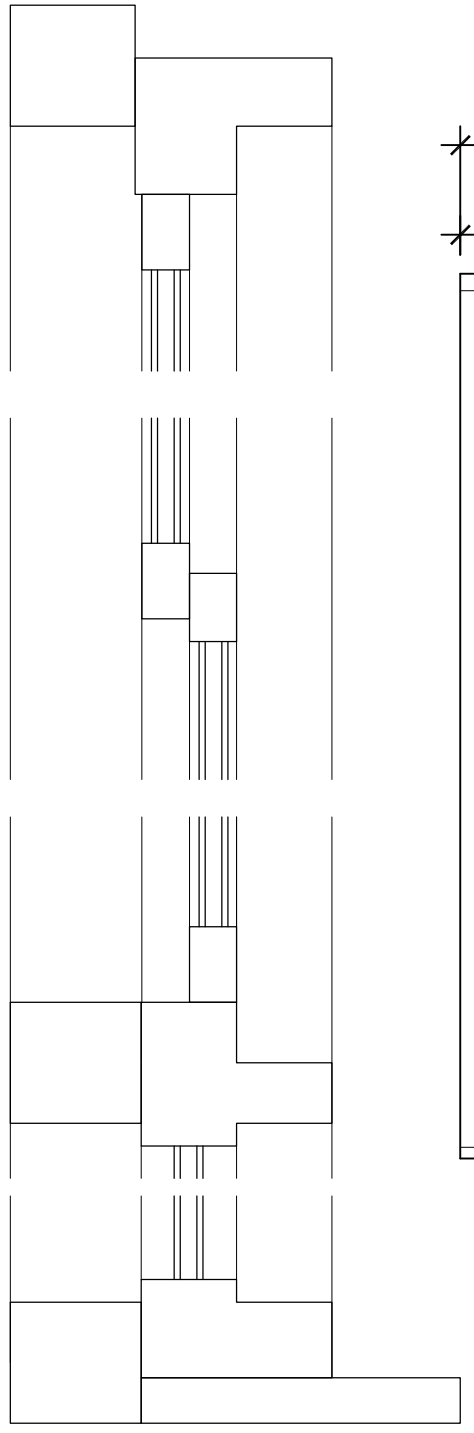

Living room
Window Section 1:5

Bedroom
Window Section 1:5

200mm @ 1:5 on A3

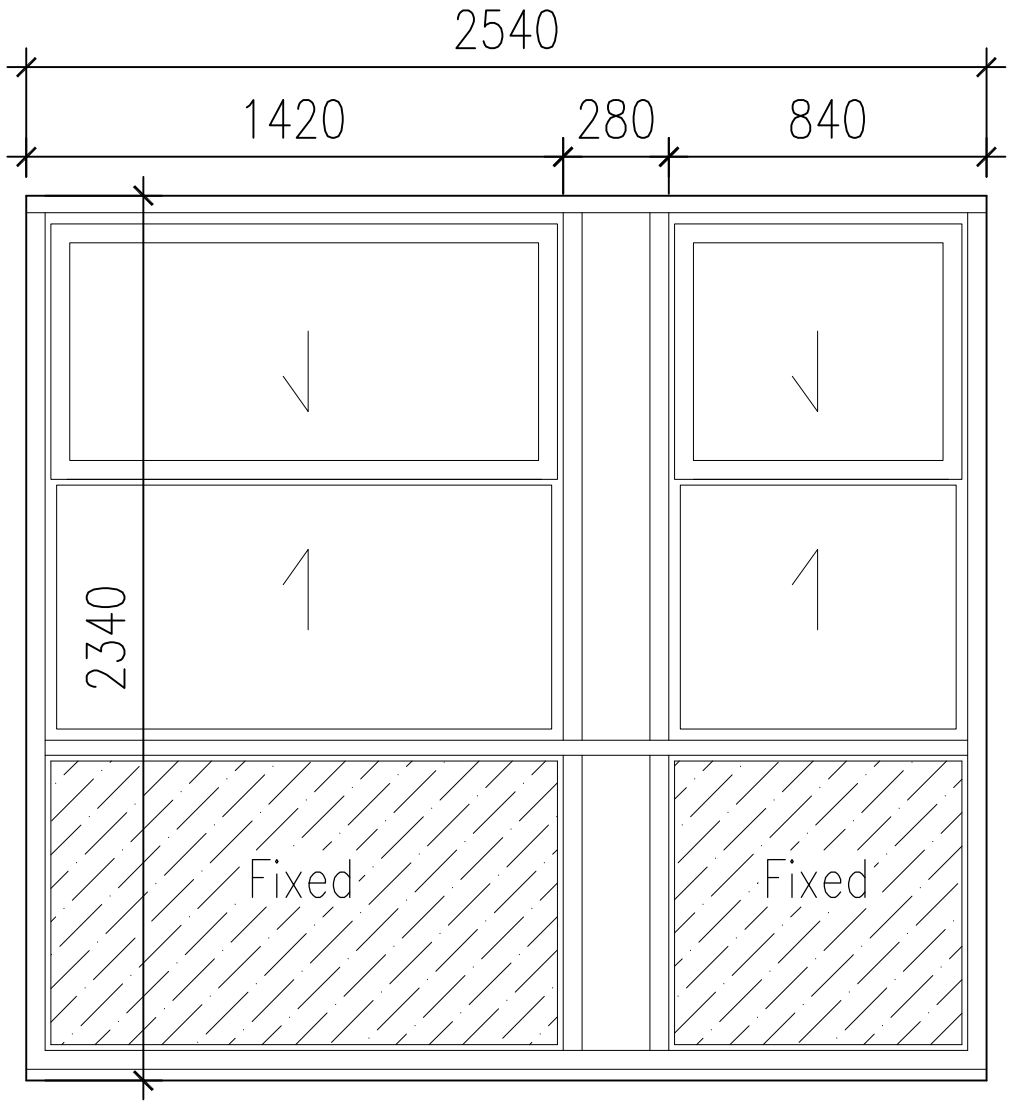

W2

Bedroom window proposed

Window Elevation 1:20

1m @ 1:20 on A3

100mm @ 1:20 on A3

Window Elevation 1:20

1m @ 1:20 on A3

100mm @ 1:20 on A3

rev.	date

These drawings should be approved by Local Authority Building Control or other appropriate checking Authority prior to commencement of the work.

No dimensions to be scaled from this drawing.
All dimensions to be checked on site.
This drawing is copyright.

client
Paul Davis

project
Flat 34 Arundel lodge
Worthing

drawing
Proposed Window details

scale 1:20@A3 date 27.03.2023

drawn CH

9 Kenton Road
Hove, East Sussex
BN3 4PG

tel: 01273 298217
fax: 01273 298217
e-mail: info@clairehaigharchitects.co.uk

Claire Haigh
Associates Ltd

CH 1162 /003 rev. C