THESE DRAWINGS ARE THE PROPERTY OF ANGLIAN HOME IMPROVEMENTS
AND MUST NOT BE USED, DISTRIBUTED, LOANED OR COPIED WITHOUT THE
EXPRESS PERMISSION OF ANGLIAN HOME IMPROVEMENTS.

Sheet 1 Of 10 | SF

Scale - N.T.S.

Drawers Initials

Anglian Home Improvements

Heritage TIMBER COLLECTION

PROPOSED: WINDOW REPLACEMENT
AT: (INSTALLATION ADDRESS) 457 UPPER SHOREHAM ROAD
SHOREHAM BY SEA
WEST SUSSEX
BN43 5WQ

CONTRACT No.: 30290353 date: 14/02/2020

ITEM 1 & 2

ENLARGED PROPOSED SECTIONS

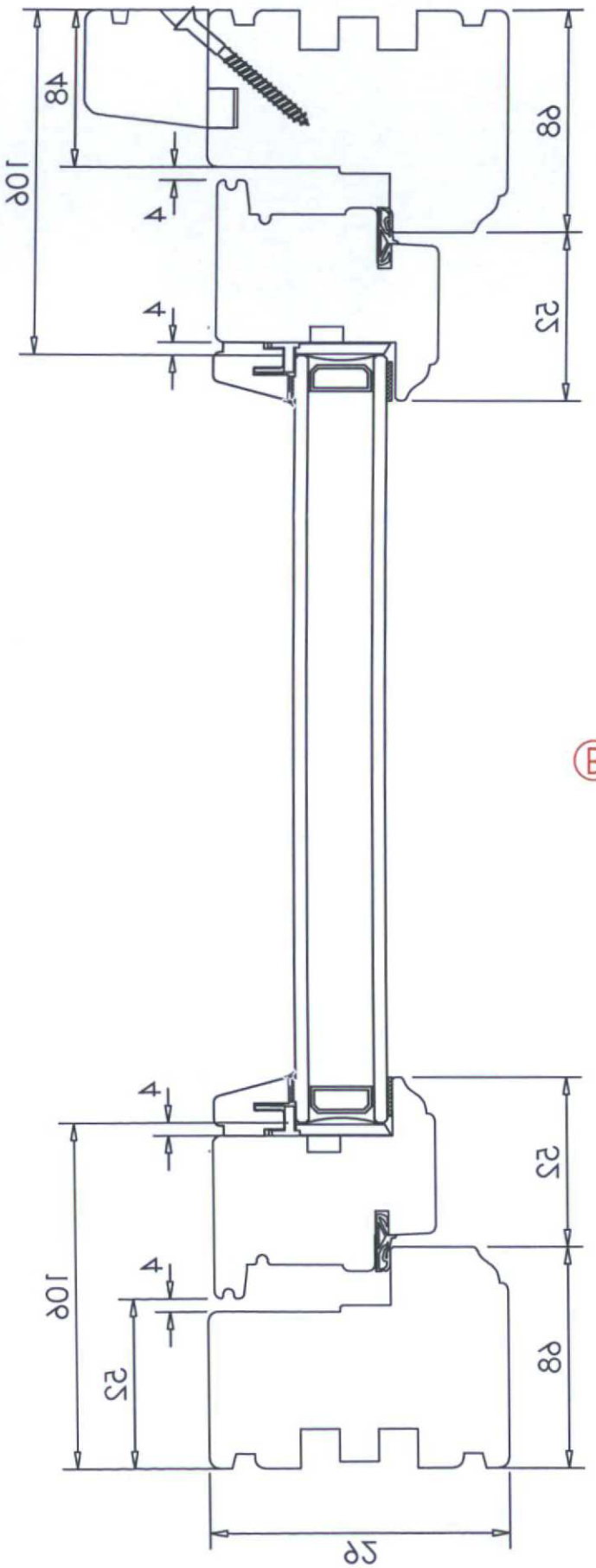

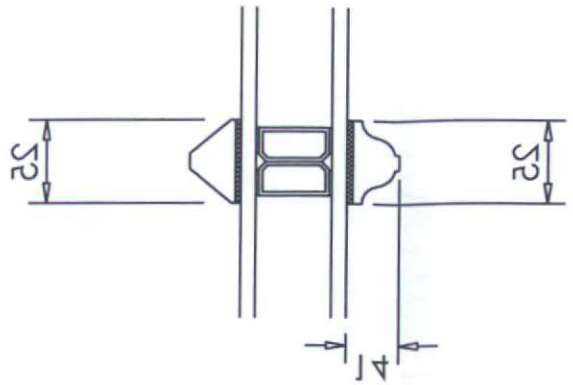

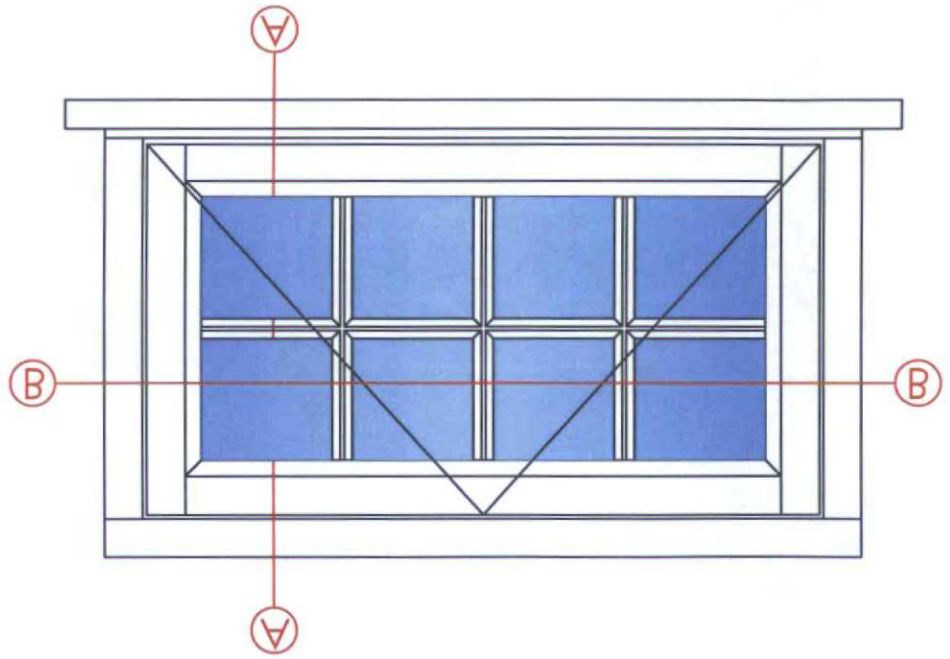

- MULTI-POINT LOCK AND LOCKING HANDLE.
- FRICTION HINGES AND FITTED WITH ESPAGNOLETTE
- TOP HUNG OPENING SASH IS HUNG ON TROLAN
- GLAZING - 28MM DOUBLE GLAZING IS SHOWN.
- 21X50 GLAZING BAR.
- STILES AND HEAD AND BOTTOM RAIL WITH SPECIAL
- INTERNALLY GLAZED PUTTY STYLE SASH WITH 58X50
- 92X68MM FRAME JAMBS & HEAD AND 92X68MM CILL.
- WINDOW COLOUR - WHITE.
- OVOLO PROFILE TO FRAME.

SPECIFICATION FOR 92MM TIMBER FLUSH CASEMENT

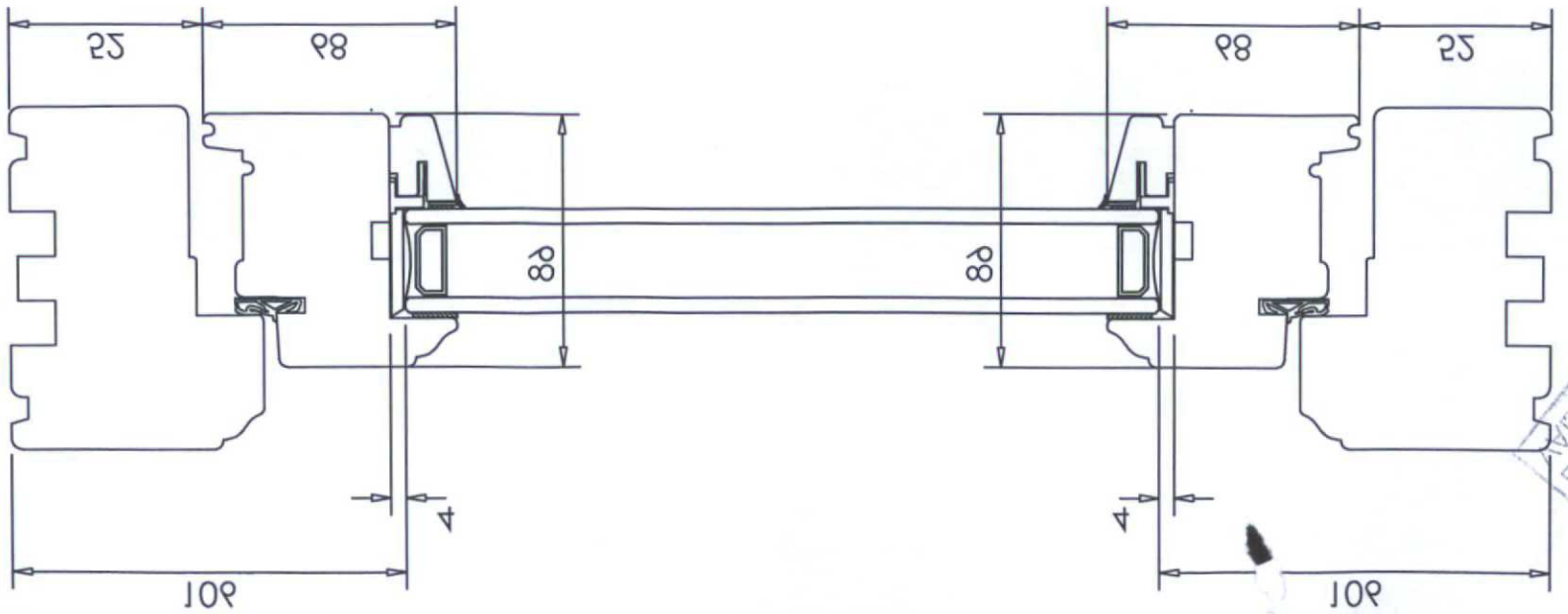

DATE
PLAN
ADDR & MORTHING
PLANNING SERVICES
PLAN
WMDW
ADDR & MORTHING
PLAN
WMDW
SERVICES
- 2 MAR 2020