V 1.8

SITE LOCATION



Reproduced by permission of Ordnance Survey on behalf of the Controller of Her Majesty's Stationery Office
All rights reserved. © Crown Copyright licence no. 100062043

SITE AREA PLAN

0 1:50,000 1km 2



SITE PHOTOGRAPH

N

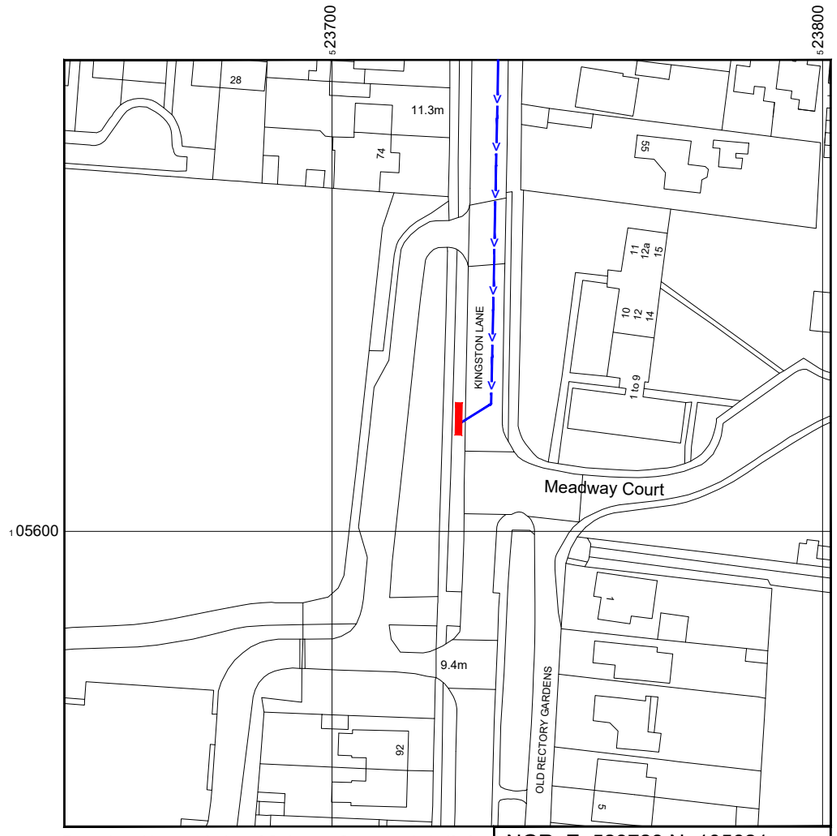

NGR E: 523728 N: 105621

Reproduced by permission of Ordnance Survey on behalf of the Controller of Her Majesty's Stationery Office
All rights reserved. © Crown Copyright licence no. 100062043

SITE LOCATION PLAN

0 1:1250 25m 50

GOOGLE MAPS QR CODE

GOOGLE MAPS - https://goo.gl/maps/XsbMUNcjsoxSQeVy7

GOOGLE STREETVIEW - https://goo.gl/maps/ccATLkBGao5YDzUs9

NOTES:

1. ALL DIMENSIONS IN MM UNLESS OTHERWISE NOTED.

DIRECTIONS TO SITE:
Head south on M23. Continue onto A23. Use the left 2 lanes to turn slightly left. At the roundabout, take the 1st exit onto the A27 ramp to Worthing. Merge onto A27. Take the A293 exit toward Shoreham/A270. At the roundabout, take the 1st exit onto A293. At the roundabout, take the 2nd exit and stay on A293. Use any lane to turn right onto Old Shoreham Rd/A270. Turn left onto Kingston Ln/B2167. Follow Kingston Ln and site location is on the right hand side.

Site Provider's Property Boundary:

Access Route To Site:

Access Route:

Master:	MBNL / EE:	Project:	Purpose of Issue:	Issue:
M001	MBNL	H3G 5G UNILATERAL	Planning	A

Date:	02/08/2021
Drawn:	CDN
Checked:	DH
Approved:	SD

Revision / Upgrade Description:
First Issue - Site nomination dated: TBC

CK Hutchison Networks (UK) Limited
Great Brighams Mead,
Vastern Road, Reading,
Berkshire, England,
RG1 8DJ

Design Consultant & Principal Contractor:

WHP Telecoms
Unit 1 Maple Park,
Low Fields Avenue, Leeds
LS12 6HH

Tel: 01133023550
e-mail: info@whptelecoms.com

Site Name:
KINGSTON LANE STREETWORKS

Site ID:
ADR19261

Address:
KINGSTON LANE, KINGSTON BUCI, ADUR, WEST SUSSEX, SOUTH EAST ENGLAND, ENGLAND,
BN42 4SQ

Title:
002 SITE LOCATION PLAN

Project:
5G UNILATERAL

Purpose of Issue:
PLANNING

EE Cell ID:	MBNL Cell ID:	Cell ID:
N/A	N/A	N/A

Master Drawing No: ADR19261_M001

Issue: A

100mm
50mm
10mm

V 1.8



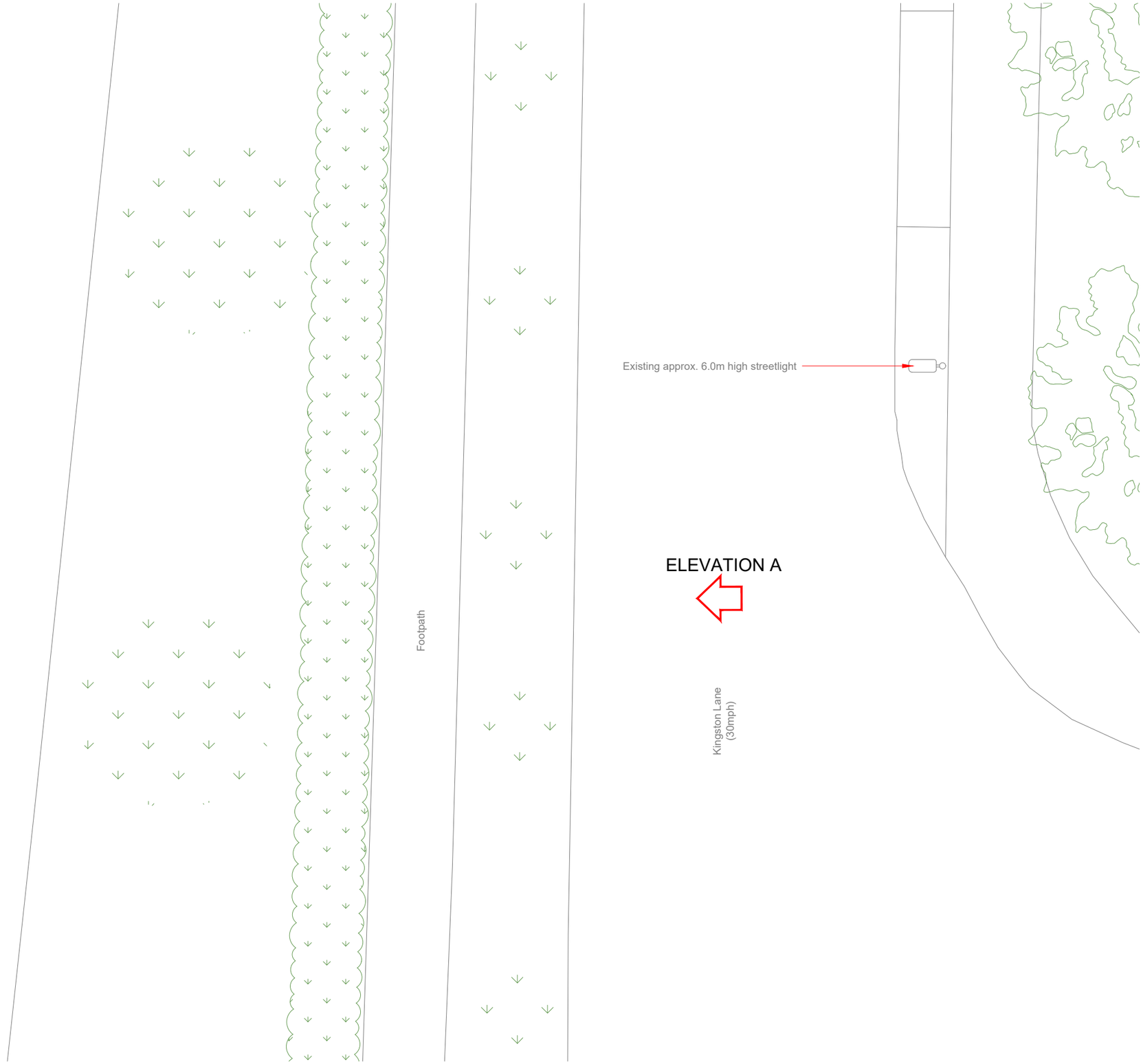

ELEVATION A

EXISTING SITE PLAN

0 1:100 2m 4

100mm
50mm
10mm

NOTES:

1. ALL DIMENSIONS IN MM UNLESS OTHERWISE NOTED.

Master:	MBNL / EE:	Project:	Purpose of Issue:	Issue:
M001	MBNL	H3G 5G UNILATERAL	Planning	A

Date:	02/08/2021
Drawn:	CDN
Checked:	DH
Approved:	SD

Revision / Upgrade Description:
First Issue - Site nomination dated: TBC

CK Hutchison Networks (UK) Limited
Great Brighams Mead,
Vastern Road, Reading,
Berkshire, England,
RG1 8DJ

Design Consultant & Principal Contractor:

WHP Telecoms
Unit 1 Maple Park,
Low Fields Avenue, Leeds
LS12 6HH

Tel: 01133023550
e-mail: info@whptelecoms.com

Site Name:
KINGSTON LANE STREETWORKS

Site ID:
ADR19261

Address:
KINGSTON LANE, KINGSTON BUCI, ADUR, WEST SUSSEX, SOUTH EAST ENGLAND, ENGLAND,
BN42 4SQ

Title:
100 EXISTING SITE PLAN

Project:
5G UNILATERAL

Purpose of Issue:
PLANNING

EE Cell ID:	MBNL Cell ID:	Cell ID:
N/A	N/A	N/A

Master Drawing No:	Issue:
ADR19261_M001	A

V 1.8

NOTES:

1. ALL DIMENSIONS IN MM UNLESS OTHERWISE NOTED.

Master:	MBNL / EE:	Project:	Purpose of Issue:	Issue:
M001	MBNL	H3G 5G UNILATERAL	Planning	A

Date:	02/08/2021
Drawn:	CDN
Checked:	DH
Approved:	SD

Revision / Upgrade Description:
First Issue - Site nomination dated: TBC

CK Hutchison Networks (UK) Limited
Great Brighams Mead,
Vastern Road, Reading,
Berkshire, England,
RG1 8DJ

Design Consultant & Principal Contractor:

WHP Telecoms
Unit 1 Maple Park,
Low Fields Avenue, Leeds
LS12 6HH

Tel: 01133023550
e-mail: info@whptelecoms.com

Site Name:
KINGSTON LANE STREETWORKS

Site ID:
ADR19261

Address:
KINGSTON LANE, KINGSTON BUCI, ADUR, WEST SUSSEX, SOUTH EAST ENGLAND, ENGLAND,
BN42 4SQ

Title:
150 EXISTING ELEVATION A

Project:
5G UNILATERAL

Purpose of Issue:
PLANNING

EE Cell ID:	MBNL Cell ID:	Cell ID:
N/A	N/A	N/A

Master Drawing No:	Issue:
ADR19261_M001	A

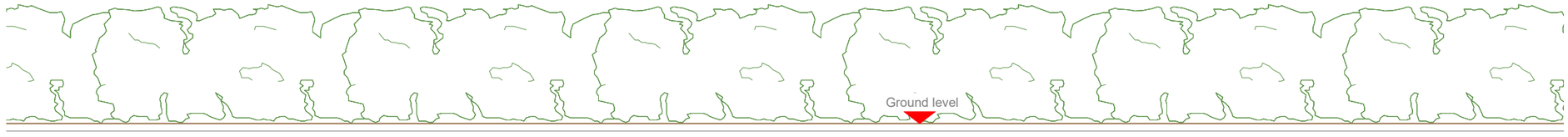

EXISTING ELEVATION A

0 1:100 2m 4

100mm
50mm
10mm

V 1.8

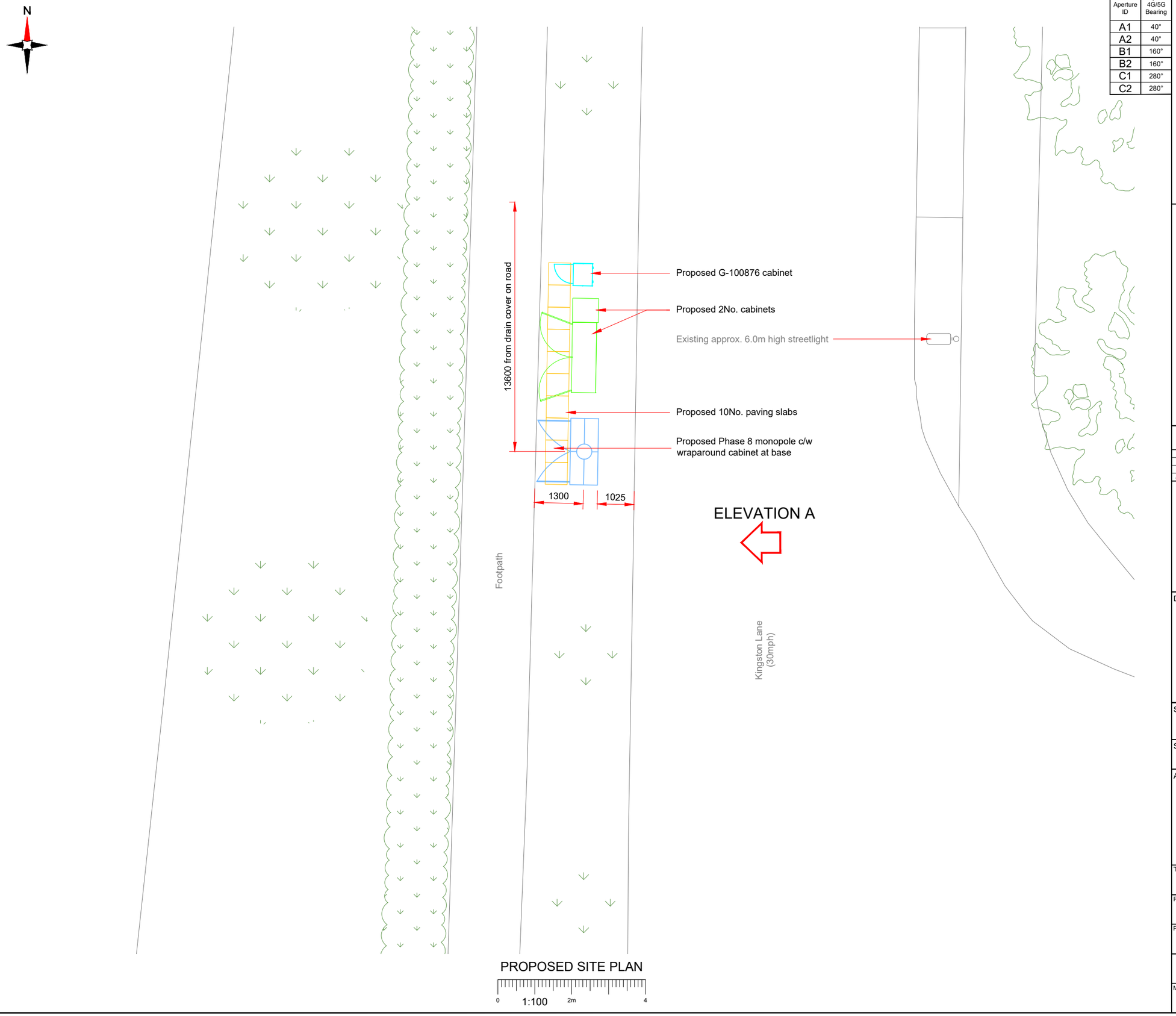

PROPOSED SITE PLAN

Antenna Aperture ID	Proposed 4G/5G Bearing
A1	40°
A2	40°
B1	160°
B2	160°
C1	280°
C2	280°

NOTES:

1. ALL DIMENSIONS IN MM UNLESS OTHERWISE NOTED.

Master:	MBNL / EE:	Project:	Purpose of Issue:	Issue:
M001	MBNL	H3G 5G UNILATERAL	Planning	A

Date:	02/08/2021
Drawn:	CDN
Checked:	DH
Approved:	SD

Revision / Upgrade Description:
First Issue - Site nomination dated: TBC

CK Hutchison Networks (UK) Limited
Great Brighams Mead,
Vastern Road, Reading,
Berkshire, England,
RG1 8DJ

Design Consultant & Principal Contractor:

WHP Telecoms
Unit 1 Maple Park,
Low Fields Avenue, Leeds
LS12 6HH

Tel: 01133023550
e-mail: info@whptelecoms.com

Site Name:
KINGSTON LANE STREETWORKS

Site ID:
ADR19261

Address:
KINGSTON LANE, KINGSTON BUCI, ADUR, WEST SUSSEX, SOUTH EAST ENGLAND, ENGLAND,
BN42 4SQ

Title:
210 PROPOSED SITE PLAN

Project:
5G UNILATERAL

Purpose of Issue:
PLANNING

EE Cell ID:	MBNL Cell ID:	Cell ID:
N/A	N/A	N/A

Master Drawing No:	Issue:
ADR19261_M001	A

V 1.8

Antenna Aperture ID	Proposed 4G/5G Bearing
A1	40°
A2	40°
B1	160°
B2	160°
C1	280°
C2	280°

NOTES:

1. ALL DIMENSIONS IN MM UNLESS OTHERWISE NOTED.

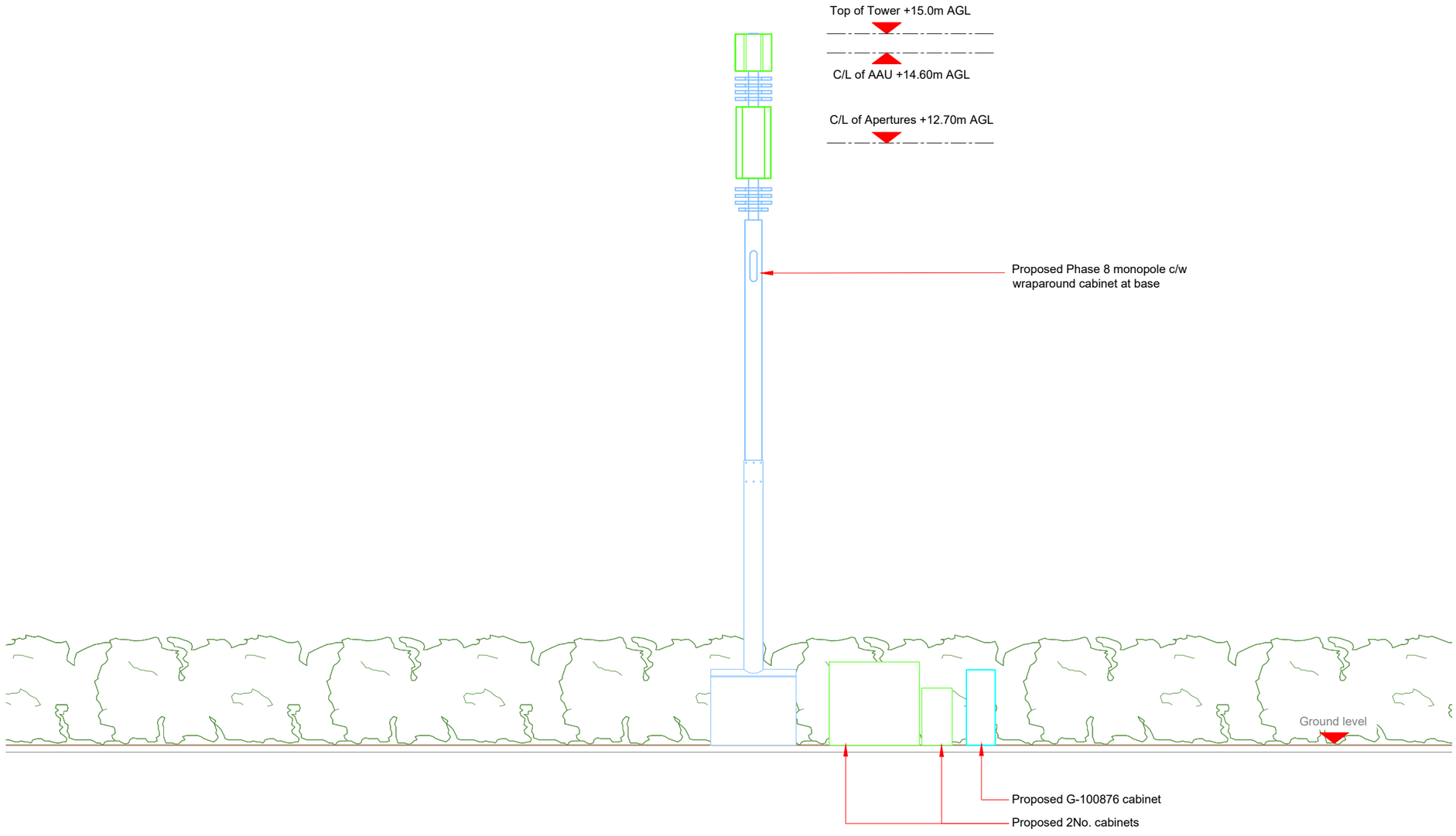

PROPOSED ELEVATION

0 1:100 2m 4

100mm 50mm 10mm

Master:	MBNL / EE:	Project:	Purpose of Issue:	Issue:
M001	MBNL	H3G 5G UNILATERAL	Planning	A

Date:	02/08/2021
Drawn:	CDN
Checked:	DH
Approved:	SD

Revision / Upgrade Description:
First Issue - Site nomination dated: TBC

CK Hutchison Networks (UK) Limited
Great Brighams Mead,
Vastern Road, Reading,
Berkshire, England,
RG1 8DJ

Design Consultant & Principal Contractor:

WHP Telecoms
Unit 1 Maple Park,
Low Fields Avenue, Leeds
LS12 6HH

Tel: 01133023550
e-mail: info@whptelecoms.com

Site Name:
KINGSTON LANE STREETWORKS

Site ID:
ADR19261

Address:
KINGSTON LANE, KINGSTON BUCI, ADUR, WEST SUSSEX, SOUTH EAST ENGLAND, ENGLAND, BN42 4SQ

Title:
260 PROPOSED ELEVATION

Project:
5G UNILATERAL

Purpose of Issue:
PLANNING

EE Cell ID:	MBNL Cell ID:	Cell ID:
N/A	N/A	N/A

Master Drawing No:	Issue:
ADR19261_M001	A

V 1.8

Proposed Antenna Aperture Schedule & RF Equipment Capacity

Antenna Aperture ID	Antenna Aperture Size (Length x Width x Depth)	Aperture Height C/L	Aperture Max Weight (kg)	Proposed 4G/5G Bearing	Tech: 4G/5G	Operator:	Antenna Aperture Coordinates		RRU No. Max Size & Weight L=520mm W=400mm D=150mm Weight=25kg	MHA No. Max Size & Weight L=300mm W=300mm D=150mm Weight=10kg	Main Feeder			BOB Max Size & Weight (300x300x250mm & 5kg)		Active Router No. Max Size & Weight (370x260x150mm & 10kg)	Passive Router No. Max Size & Weight (350x220x150mm & 10kg)
							Eastings	Northings			Size	Length	No.	No. Top	No. Bottom		
A1	778x403x268mm	14.60m	37.5kg	40°	5G	-	-	-	0	0	TBC	TBC	4	1	1	1	1
A2	1499x498x197mm	12.70m	31.8kg	40°	4G	-	-	-	3	0	TBC	TBC	4	1	1	1	1
B1	778x403x268mm	14.60m	37.5kg	160°	5G	-	-	-	0	0	TBC	TBC	4	1	1	1	1
B2	1499x498x197mm	12.70m	31.8kg	160°	4G	-	-	-	3	0	TBC	TBC	4	1	1	1	1
C1	778x403x268mm	14.60m	37.5kg	280°	5G	-	-	-	0	0	TBC	TBC	4	1	1	1	1
C2	1499x498x197mm	12.70m	31.8kg	280°	4G	-	-	-	3	0	TBC	TBC	4	1	1	1	1

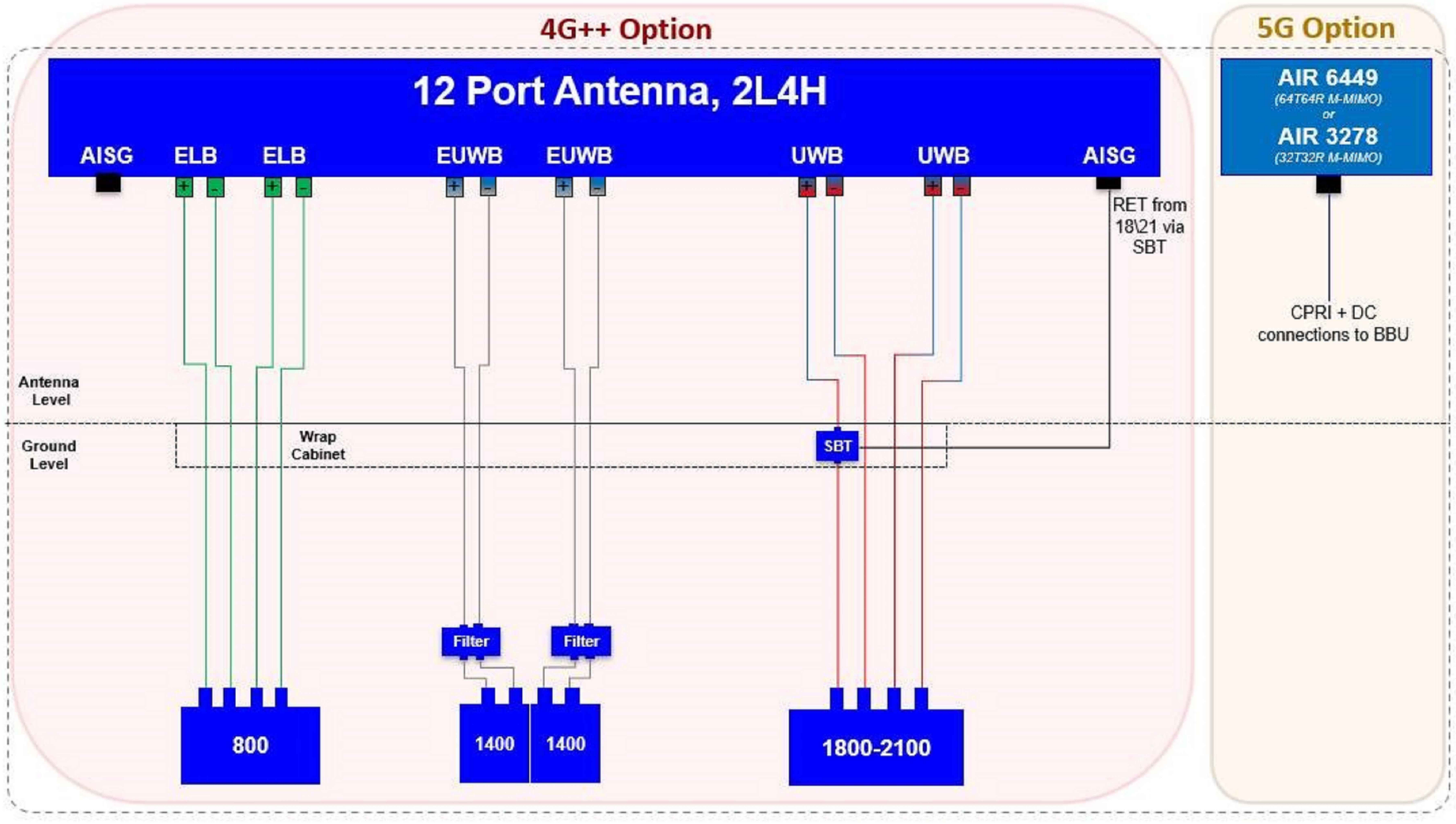

STATUS KEY:

Installed:	Existing
Retain:	Existing and to remain
Relocate:	Existing and to be relocated
Remove:	Existing to be removed from site
Proposed:	New on site

Master:	MBNL / EE:	Project:	Purpose of Issue:	Issue:
M001	MBNL	H3G 5G UNILATERAL	Planning	A

Date:	02/08/2021
Drawn:	CDN
Checked:	DH
Approved:	SD

Revision / Upgrade Description: First Issue - Site nomination dated: TBC

CK Hutchison Networks (UK) Limited
Great Brighams Mead,
Vastern Road, Reading,
Berkshire, England,
RG1 8DJ

Design Consultant & Principal Contractor:
WHP Telecoms
Unit 1 Maple Park,
Low Fields Avenue, Leeds
LS12 6HH
Tel: 01133023550
e-mail: info@whptelecoms.com

Site Name: KINGSTON LANE STREETWORKS

Site ID: ADR19261

Address: KINGSTON LANE, KINGSTON BUCI, ADUR, WEST SUSSEX, SOUTH EAST ENGLAND, ENGLAND, BN42 4SQ

Title: 303 PROPOSED ANTENNA SCHEDULE & LINE CONFIGURATION

Project: 5G UNILATERAL

Purpose of Issue: PLANNING

EE Cell ID:	MBNL Cell ID:	Cell ID:
N/A	N/A	N/A

Master Drawing No: ADR19261_M001

Issue: A

100mm
50mm
10mm

V 1.8

Support Structure Schedule

Structure ID	Status	Equipment Description / Type	Structure Manufacturer	Height AGL (m)	Colour (RAL Colour)	Headframe Details	Foundation / Support Grillage / Host Structure Details	Support Bolt Details	MBNL Ref:	Comments
ST1	Proposed	Phase 8	-	15.0m	Galvanised	-	Root Foundation	-	-	

Equipment Schedule

Equipment ID	Quantity	Status	Equipment Description / Type	Equipment Manufacturer	Dimensions (W x D x H)	Weight (kg)	Colour (RAL Colour)	Material	Location	Power	Power cable length (m)	MBNL Ref:	Comments
CAB1	1	Proposed	Commscope - Bowler	-	1900x600x1752	-	Grey	Steel	Outdoor	-	-	-	
CAB2	1	Proposed	Ericsson - 6130	-	650x700x950	-	Grey	Steel	Outdoor	-	-	-	
CAB3	1	Proposed	G-100876	-	600x520x1585	-	Grey	Steel	Outdoor	-	-	-	
CAB4	1	Proposed	Diplexer Cabinet	-	1800x750x1600	-	Grey	Steel	Outdoor	-	-	-	

STATUS KEY:

Installed: Existing
Retain: Existing and to remain
Relocate: Existing and to be relocated
Remove: Existing to be removed from site
Proposed: New on site

LOCATION KEY:

Outdoor: Located outside
Indoor: Located within an equipment cabin or equipment room
Internal: located inside a cabinet or item of equipment

Master:	MBNL / EE:	Project:	Purpose of Issue:	Issue:
M001	MBNL	H3G 5G UNILATERAL	Planning	A

Date:	02/08/2021
Drawn:	CDN
Checked:	DH
Approved:	SD

Revision / Upgrade Description:
First Issue - Site nomination dated: TBC

CK Hutchison Networks (UK) Limited
Great Brighams Mead,
Vastern Road, Reading,
Berkshire, England,
RG1 8DJ

Design Consultant & Principal Contractor:

WHP Telecoms
Unit 1 Maple Park,
Low Fields Avenue, Leeds
LS12 6HH

Tel: 01133023550
e-mail: info@whptelecoms.com

Site Name:
KINGSTON LANE STREETWORKS

Site ID:
ADR19261

Address:
KINGSTON LANE, KINGSTON BUCI, ADUR, WEST SUSSEX, SOUTH EAST ENGLAND, ENGLAND,
BN42 4SQ

Title:
305 EQUIPMENT SCHEDULE & SUPPORT STRUCTURE DETAILS

Project:
5G UNILATERAL

Purpose of Issue:
PLANNING

EE Cell ID:	MBNL Cell ID:	Cell ID:
N/A	N/A	N/A

Master Drawing No:
ADR19261_M001

Issue:
A

100mm
50mm
10mm