ALL DRAWINGS TO BE READ IN CONJUNCTION WITH SPECIALIST SUB-CONTRACTORS DETAILS.

DO NOT SCALE FROM THIS DRAWING. ONLY FIGURED DIMENSIONS TO BE USED FOR CONSTRUCTION PURPOSES. ALL DIMENSIONS ARE TO BE CHECKED ON SITE PRIOR TO INSTALLATION AND THE ARCHITECT IS TO BE NOTIFIED OF ANY DISCREPENCIES.

© This drawing is copyright and must not be reproduced without the written consent of the Architect.

REV DATE DESCRIPTION

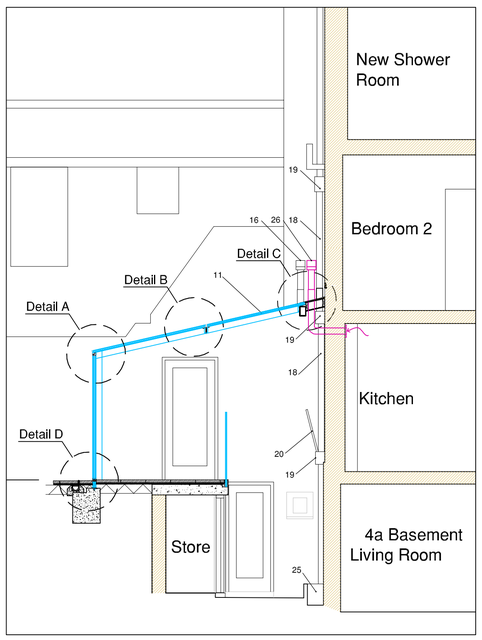

1:50 Section through proposed glass extension

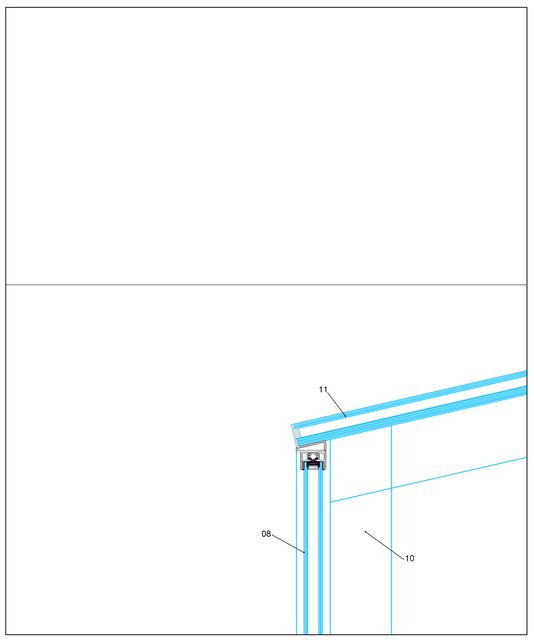

1:5 Section Detail A

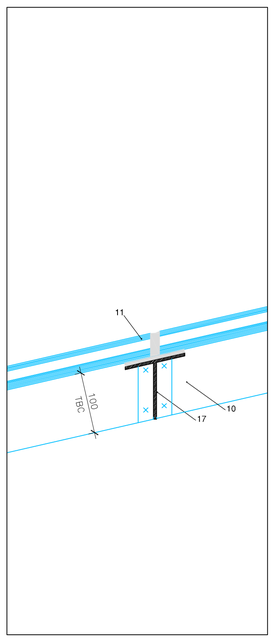

1:5 Section Detail B

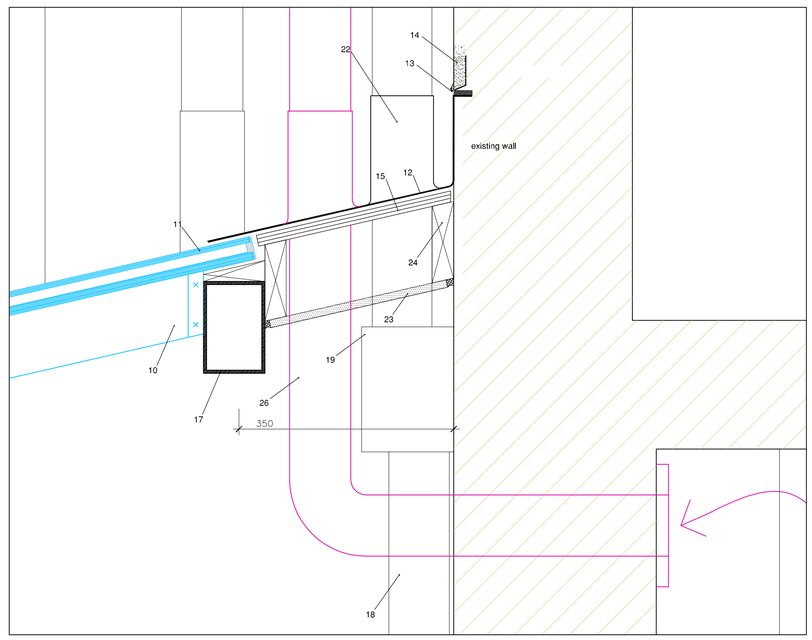

1:5 Section Detail C

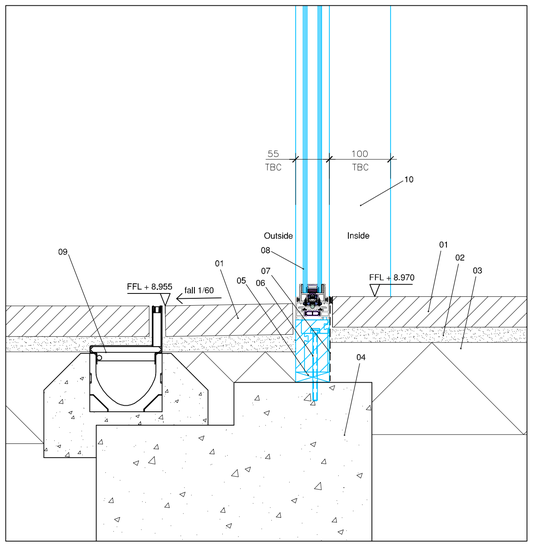

1:5 Section Detail D

ref	DESCRIPTIONS
01	50mm THICK CONCRETE PAVING SLABS
02	25mm THICK SAND CEMENT BEDDING
03	150mm THICK HARDCORE SUB-BASE
04	CONCRETE FOUNDATION TO STRUCTURAL ENGINEER'S DETAIL
05	PACKING TO SPECIALIST MANUFACTURER'S DETAIL
06	FIXING BOLT TO SPECIALIST MANUFACTURER'S DETAIL
07	DPC
08	STRUCTURAL GLASS WALL TO SPECIALIST MANUFACTURER'S DETAIL
09	LINEAR DRAIN ACO RAINDRAIN BRICKSLOT B 125, OR SIMILAR APPROVED
10	STRUCTURAL GLASS FIN TO SPECIALIST MANUFACTURER'S DETAIL
11	FRAMELESS GLASS ROOFLIGHT TO SPECIALIST MANUFACTURER'S DETAIL
12	CODE 4 LEAD ABUTEMENT FLASHING, TO BE INSTALLED IN ACCORDANCE WITH THE LEAD SHEET MANUAL AND LEAD ASSOCIATION GUIDANCE TO PROVIDE MIN 150mm UPSTAND
13	GALVANIZED STEEL BEAD FOR EXTERNAL RENDER, EXPAMET 508, OR SIMILAR APPROVED
14	EXISTING RENDER TO BE RETAINED AND PROTECTED DURING WORKS
15	18mm THICK WBP PLYWOOD
16	NEW BOILER FLUE
17	STEEL BEAM TO STRUCTURAL ENGINEER'S DETAIL
18	EXISTING RAIN WATER PIPE TO BE RETAINED
19	EXISTING HOPPER TO BE RETAINED
20	EXISTING BOILER CONDENSATION PIPE TO BE RETAINED
21	-
22	LEAD FLASHING TO RAIN WATER PIPE
23	FIBRE CEMENT BOARD
24	TSW TIMBER BEARER TO STRUCTURAL ENGINEER'S DETAIL
25	EXISTING GULLY TO BE RETAINED
26	NEW KITCHEN EXTRACTOR FAN

PLANNING

4 & 4a Ambrose Place, Worthing — Glass Extension Section Details

saville jones | architects

DWG: \\DRAWINGS\PROFORM\SJA_A1_50.DWG

date: May 2023
scale: as shown @A1

22016 | AL(0-) | 09