Shoreham-by-Sea Proposed Fascia





4200



600

Aluminium composite pan wrapped in matt laminated printed vinyl. Projecting signs are not lit.
Existing trough lighting to be utilised. All shop paint work to be repainted (walls, doors, frames and sills etc).

P1

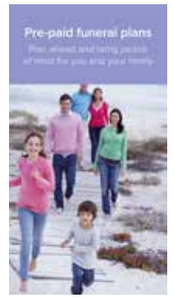

P2



rev

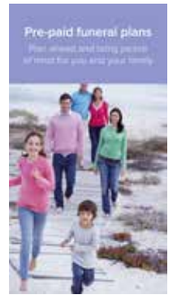

rev



3mm di-bond panels with matt laminated SAV graphics applied to both sides.

P2 FRONT: A4 clear acrylic foldovers for local community leaflets.

Supported with wire kits.

Size:600mm x 1100mm

Shopfront repainted Grey RAL 7015

LILAC	BLUE	GREY
SO LILAC C50 M40 Y0 K0	Pantone™ 2757	Pantone™ 425C
	Perspex 744 blue	

Key2Group
Plastics • Displays • Signs • Graphics

Client
Caring Lady

Location / Unit / Job
Shoreham-by-Sea

Drawing 004-K2P47448 Revision F

SCALE	SHEET SIZE	DRAWN	CHKD	DATE
1:---	A3	KN	- -	24/02/20

Key2 Group
Unit C4,
Hazleton Intchnge
Lakesmere Rd
Horndean
PO8 9JU
08450 55 44 33
info@key2uk.com
www.key2uk.com

THIS DRAWING IS THE COPYRIGHT OF THE KEY2 GROUP AND MAY NOT BE COPIED, ALTERED OR REPRODUCED IN ANY FORM, OR PASSED TO A THIRD PARTY WITHOUT THE WRITTEN CONSENT OF THE KEY2 GROUP.

DIMENSIONS SHOULD BE CHECKED AND VERIFIED ON SITE AND ANY DISCREPANCIES SHOULD BE REPORTED TO THE DESIGNER.

DO NOT SCALE FROM THIS DRAWING, EXCEPT FOR PLANNING PURPOSES. USE FIGURED DIMENSIONS ONLY.

IF IN DOUBT ASK FOR CONFIRMATION

Shoreham-by-Sea Proposed Lighting

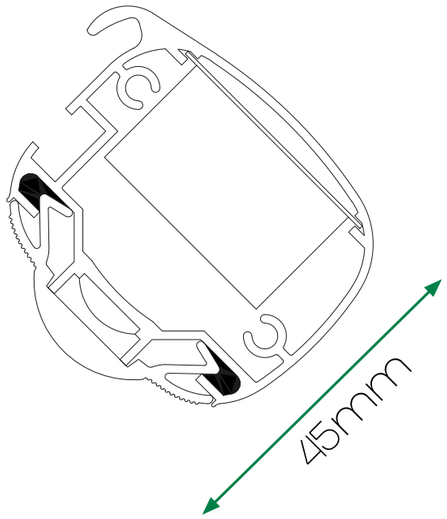

technical specification

LED strip

Latest high lighting chip giving 1650 Lumens per metre LED output.

Only 14.4 watts per metre power consumption 75% energy saving compared to Fluorescent.

24 volt input, less current less voltage drop.

6000k cool white or 3000k warm white 120 degree angle.

IP65 protected, 50,000 hours+ lamp life.

5 year Warranty.

Full CE certification and ROHS compliant.

Drivers

Epoxy encapsulated fully isolated case with IP67 protection.

Constant voltage design.

Short circuit, over current, over voltage protection.

Fitted onto quick release slide in Gear Trays.

Full CE certification and ROHS compliant.

Light Fitting

Specially designed 45mm aluminium extrusion supplied up to 6000mm lengths which can be joined together using cast aluminium connectors.

Die cast aluminium end caps with rear cable entry

Standard 300mm multi brackets.

Snap-in polycarbonate 90 degree magnifying lens diffuser.

Casing sealed and certificated to IP65.

Full CE certificate and 5 year parts warranty.

Conforms to BS EN 60598-1:2015 and BS EN 60598-2-1:1989 ‘UK Deviations Only’.

bracket specification

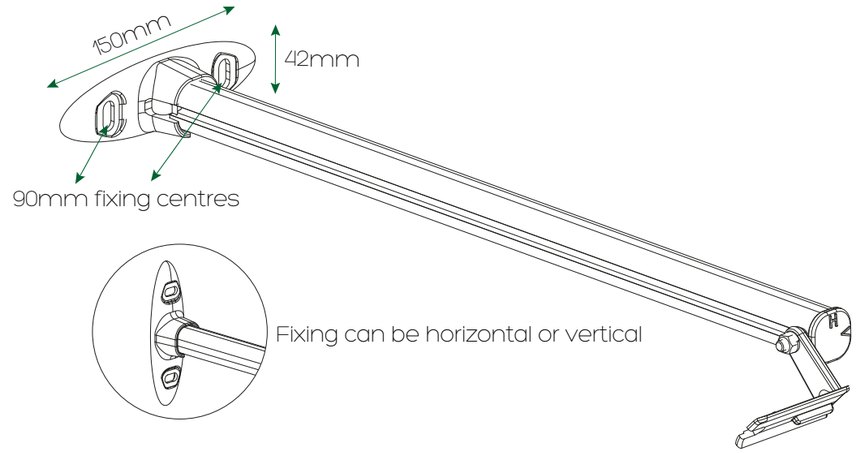

options

Cold or Warm White LED colour.

RGB RF remote control colour change available on request.

Non-standard brackets available upon request.

Standard and non-standard colours.

Photo electrical cell switches.

Key2Group
Plastics • Displays • Signs • Graphics

Client
Caring Lady

Location / Unit / Job
Shoreham-by-Sea

Drawing: 004-K2P47448 Revision: F

SCALE	SHEET SIZE	DRAWN	CHKD	DATE
1:---	A3	KN	- -	24/02/20

Key2 Group
Unit C4,
Hazleton Intchnge
Lakesmere Rd
Horndean
PO8 9JU

08450 55 44 33
info@key2uk.com
www.key2uk.com

THIS DRAWING IS THE COPYRIGHT OF THE KEY2 GROUP AND MAY NOT BE COPIED, ALTERED OR REPRODUCED IN ANY FORM, OR PASSED TO A THIRD PARTY WITHOUT THE WRITTEN CONSENT OF THE KEY2 GROUP.

DIMENSIONS SHOULD BE CHECKED AND VERIFIED ON SITE AND ANY DISCREPANCIES SHOULD BE REPORTED TO THE DESIGNER.

DO NOT SCALE FROM THIS DRAWING, EXCEPT FOR PLANNING PURPOSES, USE FIGURED DIMENSIONS ONLY.

IF IN DOUBT ASK FOR CONFIRMATION.

Shoreham-by-Sea Proposed Fascia

SECTION DETAIL FOR ALL PAN SIGNS

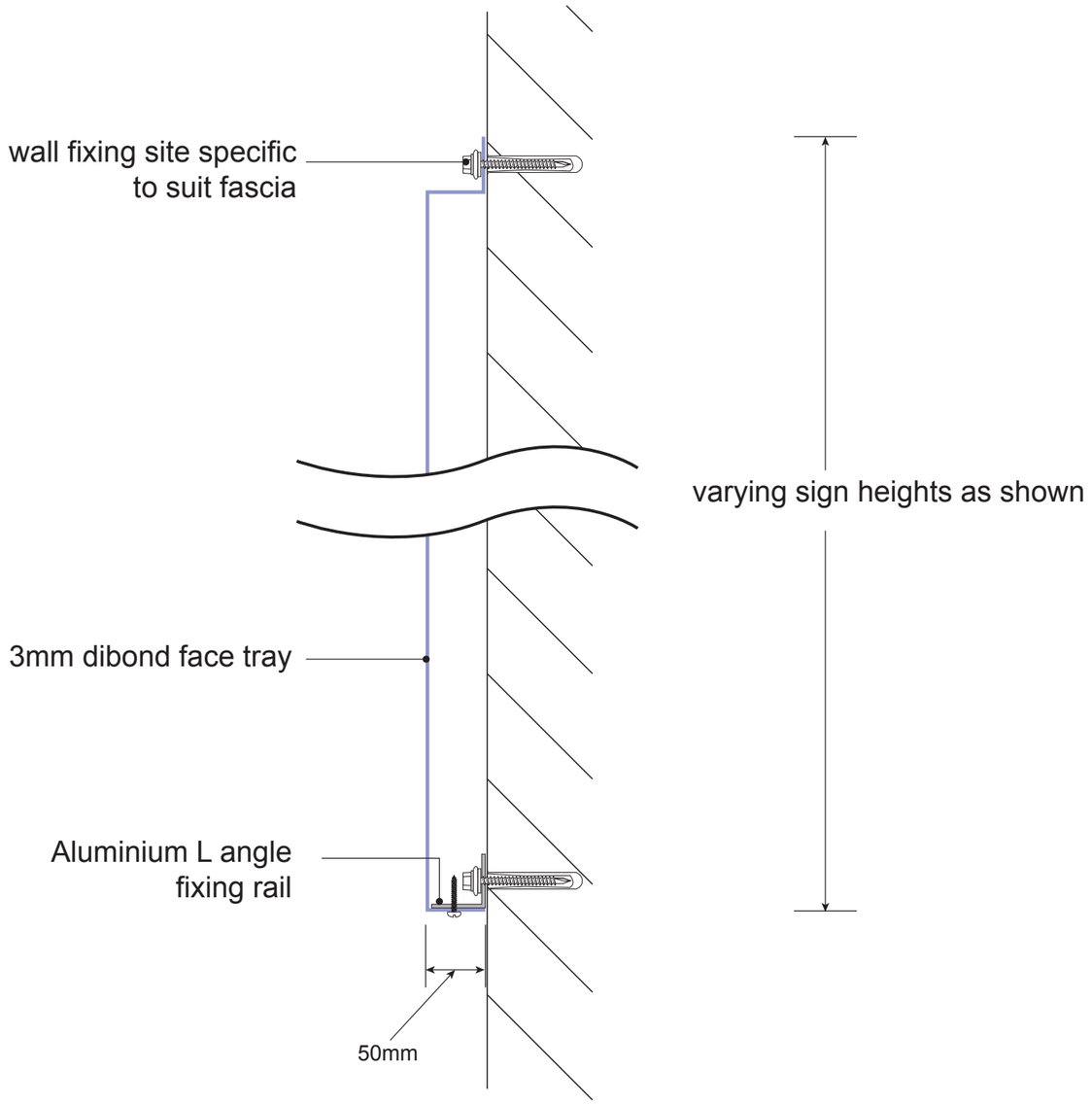

Key2Group
Plastics • Displays • Signs • Graphics

Client

Caring Lady

Location / Unit / Job

Shoreham-by-Sea

Drawing | Revision

004-K2P47448 | F

SCALE	SHEET SIZE	DRAWN	CHKD	DATE
1:---	A3	KN	- -	24/02/20

Key2 Group
Unit C4,
Hazleton Intchnge
Lakesmere Rd
Horndean
PO8 9JU

08450 55 44 33
info@key2uk.com
www.key2uk.com

THIS DRAWING IS THE COPYRIGHT OF THE KEY2 GROUP AND MAY NOT BE COPIED, ALTERED OR REPRODUCED IN ANY FORM, OR PASSED TO A THIRD PARTY WITHOUT THE WRITTEN CONSENT OF THE KEY2 GROUP.

DIMENSIONS SHOULD BE CHECKED AND VERIFIED ON SITE AND ANY DISCREPANCIES SHOULD BE REPORTED TO THE DESIGNER.

DO NOT SCALE FROM THIS DRAWING, EXCEPT FOR PLANNING PURPOSES. USE FIGURED DIMENSIONS ONLY.

IF IN DOUBT ASK FOR CONFIRMATION.

Shoreham-by-Sea Proposed Projecting Sign

SECTION DETAIL FOR ALL PROJECTING SIGNS

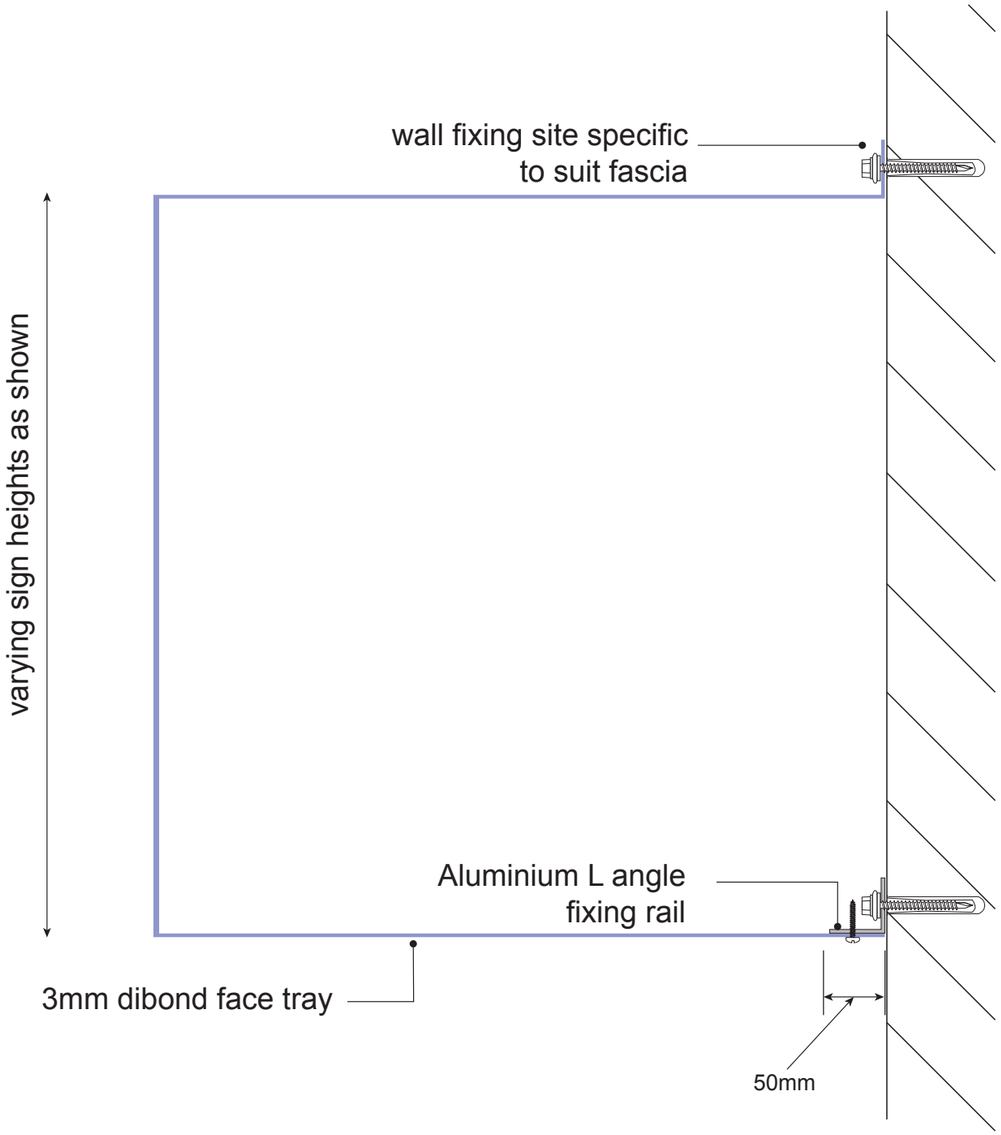

Key2Group
Plastics • Displays • Signs • Graphics

Client

Caring Lady

Location / Unit / Job

Shoreham-by-Sea

Drawing | Revision

004-K2P47448 | F

SCALE	SHEET SIZE	DRAWN	CHKD	DATE
1:---	A3	KN	- -	24/02/20

Key2 Group
Unit C4,
Hazleton Intchnge
Lakesmere Rd
Horndean
PO8 9JU

08450 55 44 33
info@key2uk.com
www.key2uk.com

THIS DRAWING IS THE COPYRIGHT OF THE KEY2 GROUP AND MAY NOT BE COPIED, ALTERED OR REPRODUCED IN ANY FORM, OR PASSED TO A THIRD PARTY WITHOUT THE WRITTEN CONSENT OF THE KEY2 GROUP.

DIMENSIONS SHOULD BE CHECKED AND VERIFIED ON SITE AND ANY DISCREPANCIES SHOULD BE REPORTED TO THE DESIGNER.

DO NOT SCALE FROM THIS DRAWING, EXCEPT FOR PLANNING PURPOSES. USE FIGURED DIMENSIONS ONLY.

IF IN DOUBT ASK FOR CONFIRMATION