

Proposed South-East Elevation -

1 : 100

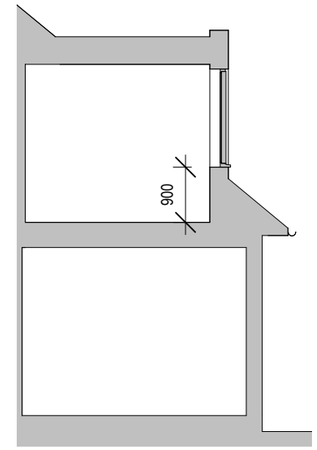

Dormer section

1 : 100



Proposed North- east Elevation

1 : 100

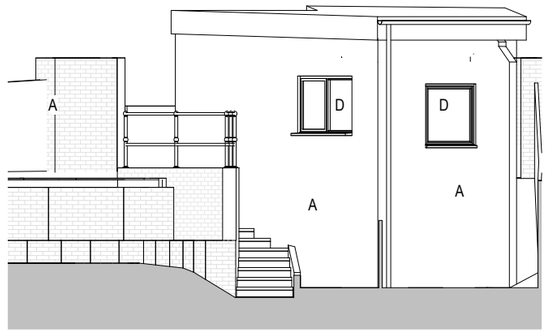

Garage - Proposed North-East Elevation

1 : 100

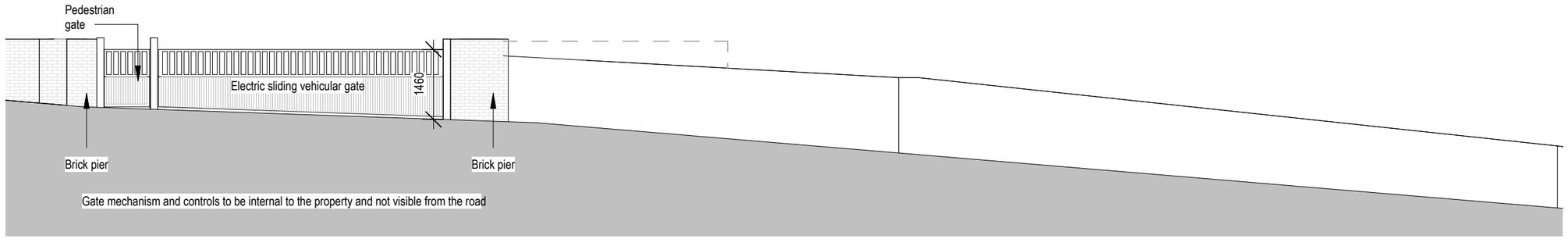

Proposed Front Boundary

1 : 100

Revisions

No.	Description	Date	By
6	Dormers and gate amended for planning	10-04-25	
5	Revised plans	03-04-25	
4	Amended plans	07-03-25	
3	Wire handrails	04-02-25	

Notes:

GENERAL NOTES:

All dimensions & levels are preliminary and approximate and subject to utilities search, legal boundaries and detailed layouts/ design development through consultation.

Dimensions are to be checked on site by contractor & sub contractors prior to commencement of work, any discrepancies are to be highlighted immediately to the architects.

KEY
A - Render
B - Grey timber cladding
C - Grey concrete tiles
D - Glass
D* - Obscured glass
E - Zinc cladding

Scale 1 to 100

0 1 2 5 M

Scale: As indicated @ A3

Project No. **537**

Project Name: **DAWN, MILL LANE**

Drawing Name: **Proposed Elevations**

Drawing No. **P014**

Revision: **P6**

Suitability Description: **PLANNING**

Drawn: MS Checked: GF Orig Paper Size: A3

FRESH | Architects
T 07703682107 | 07393913140
info@fresh-architects.co.uk | www.fresharchitects.co.uk

Use figured dimensions only. All levels and dimensions to be checked. This drawing is to be read in conjunction with all other relevant drawings and specifications.

© FRESH Architects Ltd. All rights reserved