Design and Access Statement for the Installation of 2No. Temporary 6.08 x 3.27 m Portakabins at Unit C Dolphin Way Shoreham-by-Sea West Sussex.

DISTRICT COUNCIL
PLANNING DIVISION
PLAN No. Arc/0413/07
DATE RECEIVED 20 AUG 2007

The site is a warehouse used by Southern Paper for the receiving and distributing of paper products. The existing facility comprises 832m² of office space and 3898m² of warehousing space.

Southern Paper have a need to increase their office space at the west end of their warehouse. There is no available space internally, so until an alternative permanent solution is found they propose to temporarily install 2No. 20m² Portakabins, one on top of the other, in the existing lorry park as close as possible to the warehouse. This is the minimum space that is needed.

The layout of the proposed cabins is shown on the plans submitted with the Planning Application.

The scale of the proposed huts in relation to the existing building is shown on the elevation submitted with the Planning Application.

There will be no impact on the existing landscaping features of the site.

The cabins are finished in plastic coated galvanized steel cladding in Goosewing Grey.

The access to the cabins is shown in the submitted drawings. The cabins will not be accessible to wheelchair disabled, but they are temporary, and there is no requirement for this form of access at present.

The location of the cabins will not impede access for the emergency services.

ADUR DISTRICT COUNCIL

TOWN AND COUNTRY PLANNING ACT, 1990

APPLICATION FOR PLANNING PERMISSION

4 copies of this form required, together with plans and appropriate fee.
All measurements are to be given in metric.
If site relates to Lancing or Sompting, please submit 5 copies.

FOR OFFICIAL USE ONLY
Appl. No. Ad/0043/07
Date Received 20 AUG 2007
Fee 135
Rem. List

IT IS IMPORTANT THAT YOU READ THE GUIDANCE NOTES AS INCORRECT COMPLETION INVOLVES DELAY

1. Applicant (In BLOCK CAPITALS)	Agent (if any) to whom correspondence should be sent (In BLOCK CAPITALS)
Name SOUTHERN PAPER	Name JOHN NEWSON & CO.
Address APEX HOUSE, DOLPHIN WAY, SHOREHAM-BY-SEA, WEST SUSSEX, BN43 6NR	Address 11 LAURA HOUSE, JENGERS MEAD, BILLINGSHURST, WEST SUSSEX, RH14 9NZ
Tel. No. [redacted]	Tel. No. 01403 785383

2. Type of Application (see Note 2)

		State Yes or No
(a)	Full planning permission (including changes of use)	YES
(b)	Outline planning permission	
(c)	Renewal of a temporary permission	
(d)	Permission for retention of building or continuance of use without complying with a condition imposed on a planning permission	
(e)	Permission to develop land without complying with a condition imposed on a planning permission.	

If yes, state those matters to which this application relates (tick where appropriate)

(i)	Siting	☐
(ii)	Design	☐
(iii)	External appearance	☐
(iv)	The means of access	☐
(v)	Landscaping of the site	☐

If yes, state the date and number of the permission and outline the particular condition

Date

Application No.

Condition No.

3. (a) Full address or location of the land to which this application relates

SOUTHERN PAPER
APEX HOUSE
DOLPHIN WAY
SHOREHAM-BY-SEA
WEST SUSSEX
BN43 6NR

(b) State whether applicant owns or controls any adjoining land — State Yes or No: YES — If yes, this land must be edged blue on the location plan

(c) Area of site 7226 hectares/sq. metres

Dimensions of the application site and distances from the new buildings to boundaries must be clearly indicated on plans

(d) Description of proposed development (If residential development, state no. of units proposed and type if known e.g. houses, bungalows, flats)	INSTALLATION OF 2NO. TEMPORARY 6.08 x 3.27M PORTAKABINS

(e) State whether the proposal involves:-

		State Yes or No
(i)	New building(s) or structure(s)	YES
(ii)	Alteration or extension of building(s)	NO
(iii)	Construction of a new) vehicular access to a highway) pedestrian	NO / NO
(iv)	Alteration of an existing) vehicular access to a highway) pedestrian	NO / NO
(v)	Closure of existing access	NO
(vi)	Change of use only	NO

4. *Particulars of Use of Buildings or Land:* state (a) Present use
(b) If vacant, the last use

5. **Additional Information**

		State Yes or No		State Yes or No
(a)	Is the application for industrial, office warehousing, storage, shopping, commercial purposes or places of public assembly? (See note 5)	YES	If yes, complete part 2 of form C.P. 1	YES
(b)	Is the application for the winning or working of minerals?	NO	If yes, complete part 4 of form C.P. 1	
(c)	Is the application for an agricutural dwelling or building?	NO	If yes, complete part 6 of form C.P. 1	
(d)	Does the proposed development involve the demolition of any residential units?	NO	If yes, how many units? Please indicate their position on plans	
(e)	Does the proposed development involve the felling of any trees?	NO	If yes, indicate their position on plans	
(f)	Does the proposed development involve any public right of way within the site?	NO	If yes, indicate the position on plan	
(g)	Does the proposed development involve demolition or alteration of a building or Special Architectural or Historic interest or demolition within a Conservation Area?	NO	If YES a separate application for **Listed Building Consent or Conservation Area Consent** may be necessary.	

(h) (i) How will surface water be disposed of? (i) EXISTING MAINS DRAINAGE
(ii) How will foul sewage be disposed of? (ii) N/A.
(e.g. mains, cesspit, etc.)

6. Plans (See Note 6). List of drawings and plans submitted as part of the application - indicate drawing numbers and scales.
4 sets of all drawings are required. Additional copies in respect of major applications will assist in determination of such applications. All measurements are to be given in metric (89/617 EEC Directive) 1262-00-00 REV 210507 - LOCATION PLAN.
1262-01-00 REV 110507 - SITE PLAN.
1262-01-02 REV 110507 - SOUTH ELEVATION.
BR0076 REV B - PK202. TWO STOREY SPEC DRAWING.

7. Fees (See Note 7)
If a fee is submitted please give the amount £135.00

8. I/WE APPLY FOR PLANNING PERMISSION AS DETAILED ABOVE.

DATE . . . 4 July 2007 . . . . . SIGNED . [redacted] . . . . . .

on behalf of Southern Paper
(insert applicant's name if signed by an agent)

9. Certificate under Section 65 of the Town and Country Planning Act. 1990 (Article 7 of the T & CP (General Development Procedure) Order 1995
N.B. A signed certificate MUST accompany this application (See Note 9).
If the applicant is the sole owner (a) the following certificate should be completed and signed.

CERTIFICATE A

(a) Owner means a person having a freehold interest or tenancy the unexpired term of which was not less than 7 years

1. **Certificate A(a)**
I certify that

on the day 21 days before the date of the accompanying application nobody, except the applicant, was the owner (a) of any part of the land to which the application relates.

*2. None of the land to which the application relates is or is part of an agricultural holding.

OR

*3. * I have ~~given requisite notice to every person other than~~ * myself ~~who, on the day~~
The applicant has ~~himself/herself~~

21 days before the date of the application ~~was a tenant~~ of an agricultural holding on all or part of the land to which the application ~~relates~~, as follows

~~Name of Tenant — Address at which Notice was served — Date on which Notice was served~~

*Delete where inappropriate

Signed [redacted]
On behalf of Southern Paper
Date . . . 4 July 2007

WEST SUSSEX

ADUR DISTRICT COUNCIL

Application No.

(For official use only)

PLANNING APPLICATION FORM PART 2

Additional information required in respect of Applications for Industrial, Office, Warehousing, Storage, Shopping, Rest and Nursing Homes, Commercial Purposes or Places of Public Assembly.

4 copies of this form should be submitted

N.B. Please use GROSS figures only (external measurement). All measurements are to be given in metric (89/617 EEC Directive)

In the case of industrial development, give a description of the processes to be carried on and of the end products, and the type of plant or machinery to be installed. Please relate your answer to question 5 below.	ADUR DISTRICT COUNCIL PLANNING DIVISION PLAN No. A/0/07/1367
Name and address of proposed occupier and type of business	SOUTHERN PAPER APEX HOUSE DOLPHIN WAY SHOREHAM-by-SEA WEST SUSSEX BN43 6NR DATE RECEIVED 2 0 AUG 2007
Is the proposal related to an existing use on or near the site? If so, please explain the relationship.	State Yes or No YES
Is this a proposal to replace existing premises in this area or elsewhere which have become obsolete, inadequate or otherwise unsatisfactory? If so, please give details including gross floor area of such premises and state your intentions in respect of those premises.	State Yes or No NO

Details of floor areas and uses	Existing Floor Space or use(if any)	Proposed New Floor Space or use	Total Floor Space (allow for any space lost)
(a) What is the amount of industrial floor space?	(a)..... m^2	..... m^2	..... m^2
(b) What is the amount of office floor space?	(b) 832 m^2	38 m^2	870 m^2
(c) What is the amount of retail floor space?	(c)..... m^2	..... m^2	..... m^2
(d) What is the amount of storage or warehousing floor space?	(d) 3898 m^2	NIL m^2	3898 m^2
(e) Other uses(please specify).....	(e)..... m^2	..... m^2	..... m^2
.....	..... m^2	..... m^2	..... m^2
TOTALS			

Staff	Office Male	Office Female	Industrial Male	Industrial Female	Other Staff Male	Other Staff Female
(a) Number of staff in existing premises on the site	(a) 25	13	43	2	N/A	
(b) How many new staff will be employed on the site as a result of the development?	(b) N/A		N/A		N/A	
(c) If you propose to transfer staff from other premises, please give details of the numbers involved and of the premises affected.	(c) N/A		N/A		N/A	

7.	In the case of restaurants, hotels, public houses, theatres, cinemas, meeting halls, Rest and Nursing Homes, etc. please specify (a) public floor space (Total) (b) seating capacity (c) bar floor area (d) bedrooms as appropriate	(a)..... sq.m. (b)..... (c)..... sq.m. (d)..... single double
8.	What provisions have been made for parking, loading and unloading of vehicles within the curtilage on the site? (Please show location of such provision on the plans and distinguish between parking for operational needs and other purposes) State number of spaces	car..... lorry.....
9.	What is the estimated vehicular traffic flow to the site during a normal working day? (Please include all vehicles but separately specify those used by employees driving to work)	CARS 10 EMPLOYEES TRUCKS 14 Leaving and returning Twice a day.
10.	What is the nature, volume and proposed means of disposal of any trade effluents or trade refuse?	NOT APPLICABLE
	HAZARDOUS MATERIALS	State Yes or No
11.	Will the proposed use involve the use or storage of any hazardous substances?	NO — If 'YES' please indicate

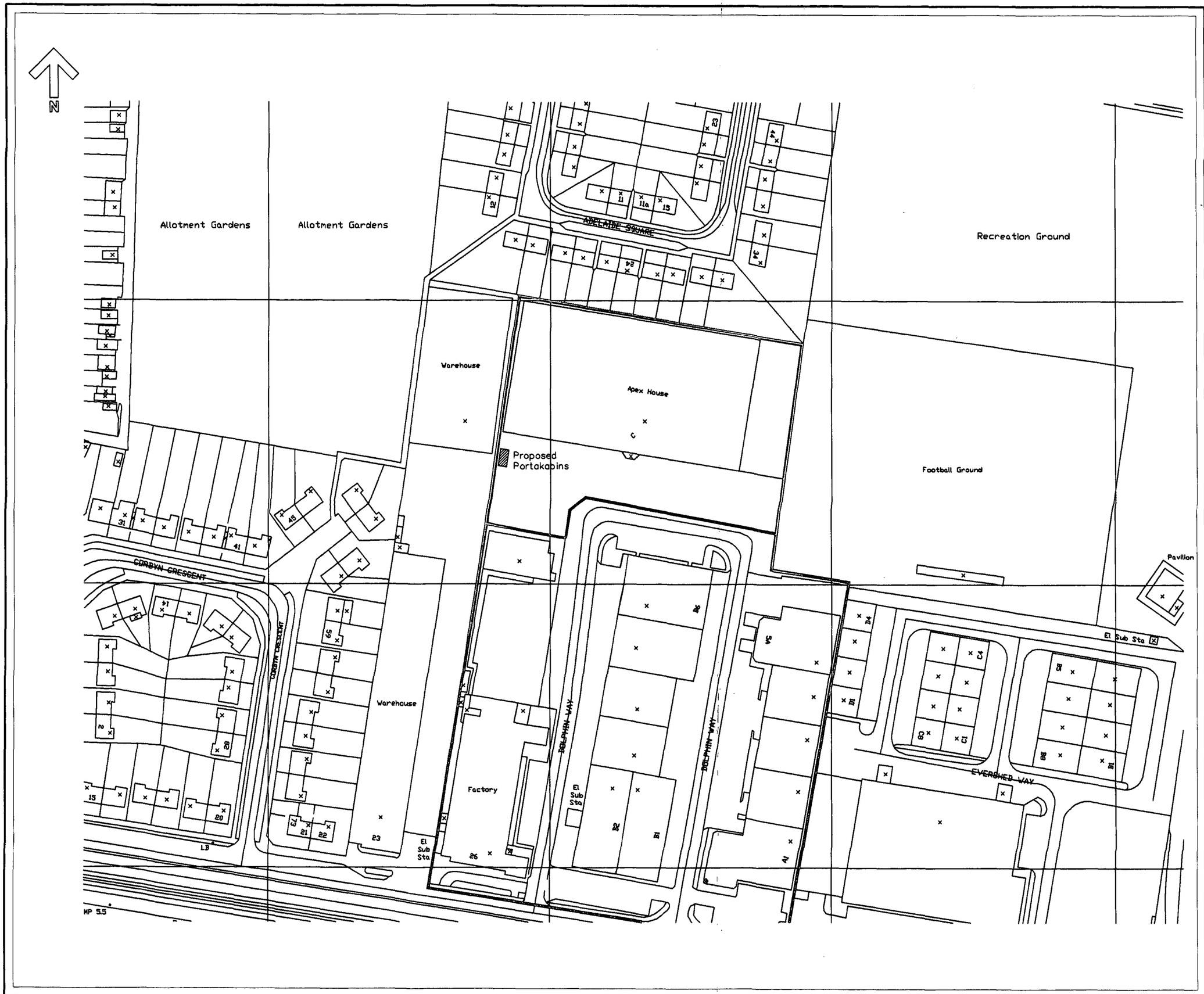

© Copyright John Newson & Co. The copyright in this document belongs to John Newson & Co. This plan can not be copied or reproduced in any form or by any means without the written permission of John Newson & Co.

ADUR DISTRICT COUNCIL
PLANNING DIVISION
PLAN No. Ano/au3/07
DATE RECEIVED 20 AUG 2007

Revision	Description
210507	Boundary adjusted

Architectural Design & Project Management

John Newson & Co

11 Laura House
Jengers Mead
Billingshurst
West Sussex
RH14 9NZ

Tel: 01403 785383
Fax: 01403 785651
Email: admin@john-newson.co.uk

Drawn by: PB Date: 11/05/07
Checked by: Date:
CAD file: 1262-00-00
Layout: Location Plan

Drawing status
For Planning Application

Project
Delivery Company (Southern Paper)

Drawing
Location Plan

Scale: 1:1250 at A3

Job No: 1262

Drg No: 1262-00-00

Revision: 210507

© Copyright John Newson & Co. The copyright in this document belongs to John Newson & Co This plan can not be copied or reproduced in any form or by any means without the written permission of John Newson & Co

Warehouse

Existing Delivery Company Distribution Warehouse

Entrance to Office
Kerb Line
Industrial Door
Industrial Door
Loading Ramp
Loading Ramp
Loading Ramp
Proposed 2 No. Portakabins Pacemaker202 MK6
Stairs
Fencing
Wall
Fencing
Kerb Line
Wall
Fencing
Kerb Line
Lorry bays (3.2 m wide each)
Housing for Fuel Pump
Entrance Gate
Kerb Line
Fencing

PLANNING
PLAN No. 07/00738/FUL
DATE RECEIVED 20 AUG 2007

Revision	Description

Architectural Design & Project Management
John Newson & Co
11 Lauro House
Jengers Mead
Billingshurst
West Sussex
RH14 9NZ

Tel: 01403 785383
Fax: 01403 785651
Email: admin@john-newson.co.uk

Drawn by: PB Date: 11/05/07
Checked by: Date:
CAD file: 1262-01-00
Layout: Site Plan

Drawing status
For Planning Application

Project
Delivery Company (Southern Paper)

Drawing
Site Plan

Scale: 1:200 at A1
Job No: 1262
Drg No: 1262-01-00
Revision: 110507

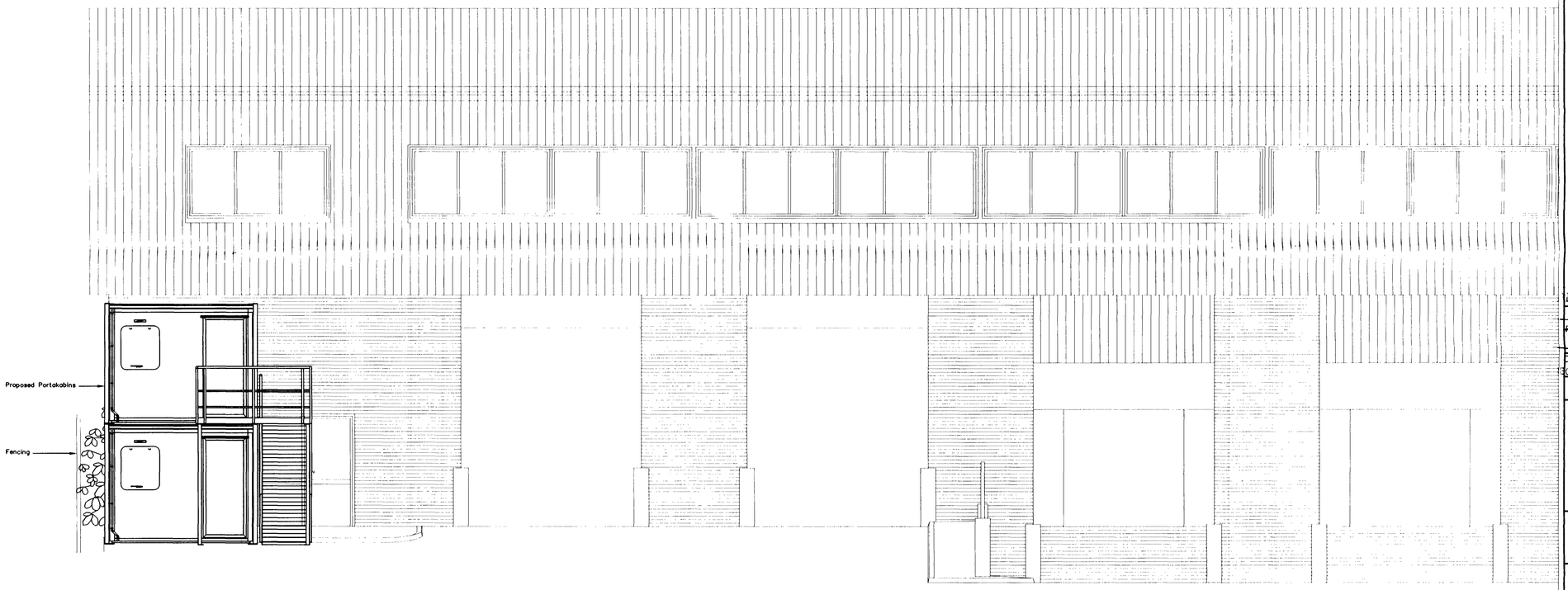

South Elevation

© Copyright John Newson & Co. The copyright in this document belongs to John Newson & Co. This plan can not be copied or reproduced in any form or by any means without the written permission of John Newson & Co.

DUR DISTRICT COUNCIL
PLANNING DIVISION
PLAN No. Arc6u3/07
DATE RECEIVED 20 AUG 2007

Revision	Description

Architectural Design & Project Management
John Newson & Co
11 Laura House
Jengers Mead
Billingshurst
West Sussex
RH14 9NZ

Tel: 01403 785383
Fax: 01403 785651
Email: admin@john-newson.co.uk

Drawn by: PB Date: 11/05/07
Checked by: Date:
CAD file: 1262-01-02
Layout: South Elevation

Drawing status
For Planning Application

Project
Delivery Company (Southern Paper)

Drawing
South Elevation

Scale: 1:50 at A1
Job No: 1262
Drg No: 1262-01-02
Revision: 110507

Do not scale off this drawing. All discrepancies to be reported to Portakabin Limited.

© Portakabin Limited 1995.
This drawing is the property of Portakabin Limited, it must not be copied or reproduced or divulged to anyone without written permission.

Rev. Date By

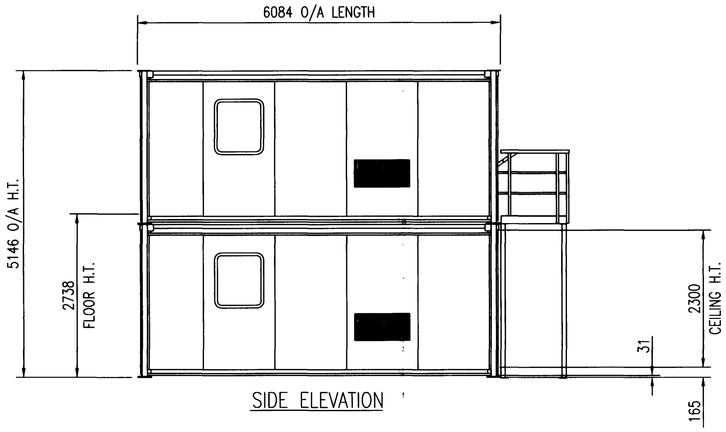

SIDE ELEVATION

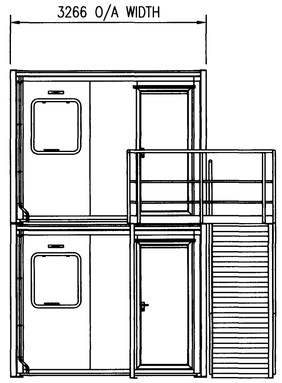

END ELEVATION

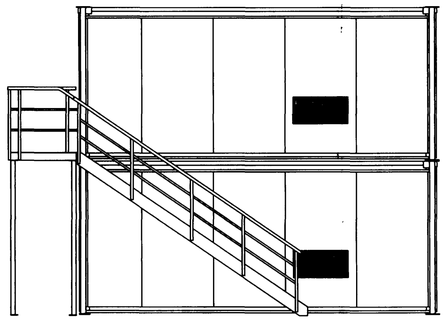

SIDE ELEVATION

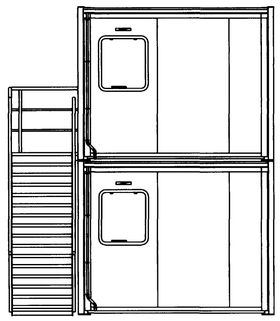

END ELEVATION

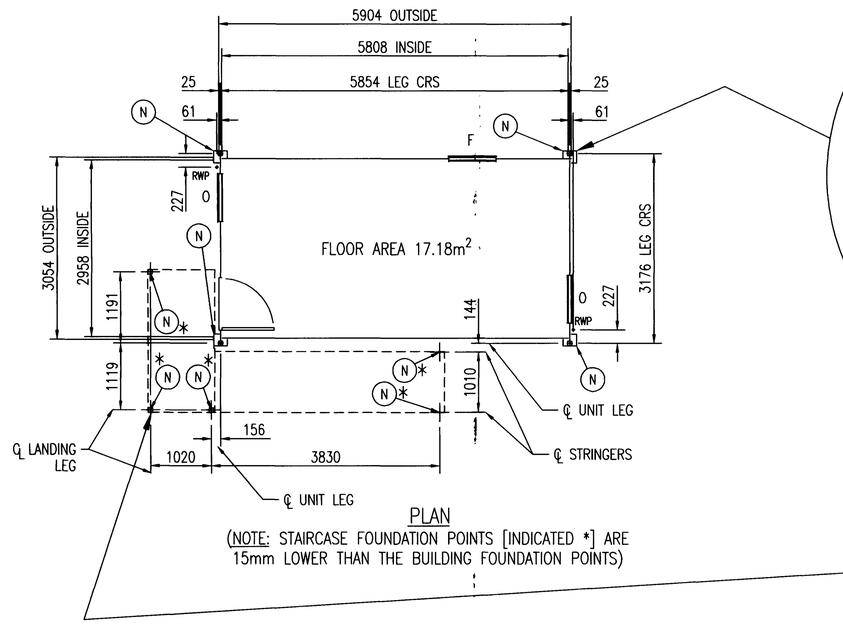

PLAN

(NOTE: STAIRCASE FOUNDATION POINTS [INDICATED *] ARE 15mm LOWER THAN THE BUILDING FOUNDATION POINTS)

KEY

O	OPEN WINDOW
F	FIXED WINDOW
RWP	RAIN WATER PIPE

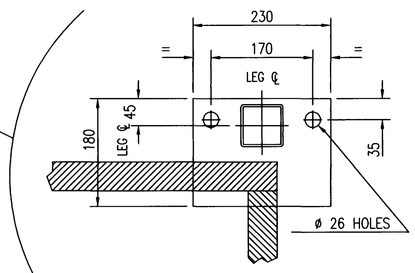

LODASTRUT LEG BASE PLATE DETAIL
(SCALE 1:5)

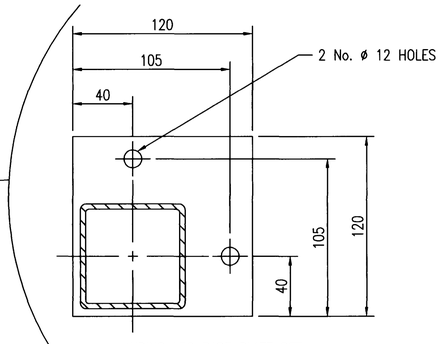

LANDING LEG BASE PLATE DETAIL
(SCALE 1:2)

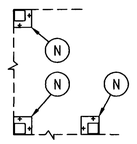

LANDING LEG BASE PLATE ORIENTATION
(SCALE 1:10)

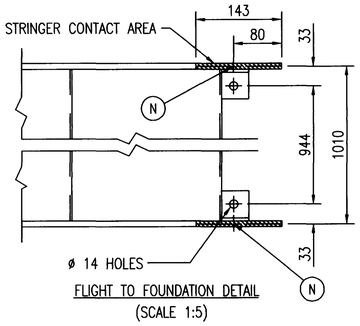

FLIGHT TO FOUNDATION DETAIL
(SCALE 1:5)

FOUNDATIONS GENERAL

The buildings and staircases require pad foundations or a hardstanding capable of supporting the loadings given below. Foundations are to be designed in accordance with BS 8004. It is recommended that professional advice is obtained for the design of the foundations. Point of support should be in the same level plane to a tolerance of ± 3mm. When pad foundations are to be used they should be of sufficient size to ensure that the anchor bolts for the building and staircase can be positioned far enough away from the edges of the foundations as recommended by the anchor bolts manufacturer.

FOUNDATIONS – BUILDING

Buildings having the same leg centre dimensions can be double stacked. All buildings must be sited with the Lodastrut legs fully retracted and with all leg pins fitted through the outer legs and secured by the cotter at the end of each pin. The lower buildings must be anchored to the foundations at each of the 4 Lodastrut leg positions using the anchor bolts detailed below. The upper and lower buildings must be bolted together at each of the 4 Lodastrut leg positions with M20 bolts (strength grade 8.8), washers and self locking nuts (strength grade 8).

Anchor bolt : Manufactured by Hilti (Great Britain) Ltd.
Adhesive anchor ref. HAS–R M20 X 240mm stainless steel anchor rod complete with nut and washer.
Adhesive cartridge ref. HEA M20 X 170mm.

FOUNDATIONS – STAIRCASE

The staircase must be anchored to the foundations at each of the landing leg and flight string positions using the anchor bolts detailed below. The landing must be bolted to the building structure using the brackets supplied with the staircase.

Anchor bolt : Manufactured by The Rawlplug Company Ltd.
Through Bolt code 56–628, M10 X 80mm stainless steel anchor rod complete with nut and washer.

FOUNDATION LOADINGS

The foundation loadings for the building include the shell weight of the standard buildings, an imposed design floor load of 3kN/m² (per storey), an imposed design roof load of 0.75kN/m² and an applied basic wind speed of 50 m/s.
The foundation loadings for the staircase include the weight of the staircase and an imposed design floor load of 4kN/m² .

Foundation Position 1---------- 4 kN)
Foundation Position 2---------- 4 kN)
Foundation Position 3---------- 8 kN) Staircase
Foundation Position 4---------- 5 kN)
Foundation Position 5---------- 5 kN)

Foundation Position 6 ---------- 44 kN) Building

STAIRCASE DIMENSIONS

STAIRS

Rise	170
Rise O/A	2720
Going	250
Going O/A	3750
Twice Rise Plus Going	590
Pitch	34.2°
Tread width	270
Overlap of treads	20
Width between strings (unobstructed width)	1000
Width between handrails	1012
Handrail diameter	48
Flight O/A width (handrail)	1108
Handrail Ht (Vertically from pitch line)	900
Length O/A (including landing)	5014

END DOOR LANDING

Width O/A	1120
Length O/A	2380
Handrail Height	1100

UNIT STANDARD COLOURS

External :	Walls	– Silk Grey nearest BS ref. 10 A 05
	Roof	– White nearest BS ref. 00 E 55
	Corner wall trims	– Silk Grey nearest BS ref. 10 A 05
	Bottom wall trims	– Silk Grey nearest BS ref. 10 A 05
	Fascia	– Blue Grey nearest BS ref. 18 B 29
	Lodastrut legs	– Blue Grey BS 4800 18 B 29
	Doors leaf	– Golden Amber nearest BS ref. 08 E 51
	Door frame	– Silver anodised aluminium
	Windows	– Blue Grey BS 4800 18 B 29
	Rainwater gutter	– Silver anodised aluminium
	Rainwater fall pipe	– Black nearest BS ref. 00 E 53

STAIRCASE STANDARD COLOURS

Balustrade/handrail Landing legs Exposed faces of landing frame	Blue Grey BS 4800 18 B 29
Landing frames Landing platforms Flight treads Flight strings	Natural colour zinc coating

PLANNING DIVISION
PLAN No. Proclaurslot
DATE RECEIVED 20 AUG 2007

Portakabin

Portakabin Limited Huntington York YO3 9PT
Telephone 01904 611655 Fax 01904 611644

Project BUILDMASTER SERIES 5

Client

Title
8x2?2 TWO STOREY
SPECIFICATION DRAWING
WITH
STRAIGHT FLIGHT
EXTERNAL STAIRCASE

Date	Drawn
13-9-95	C CURRAN

Scale 1:2, 1:5, 1:10 & 1:50

Drg. No.	Rev.
BM0076	P