North elevations

Existing

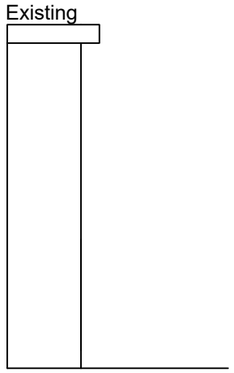

Proposed

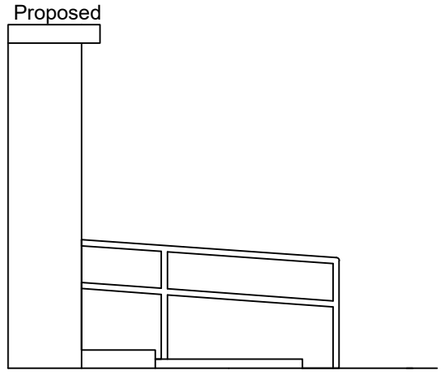

West elevations

Proposed

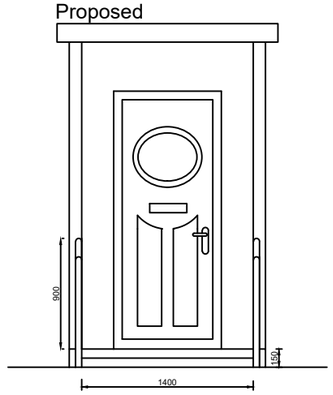

Existing

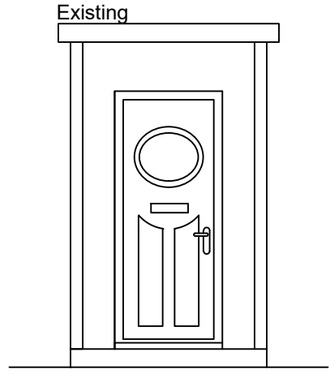

South elevations

Proposed

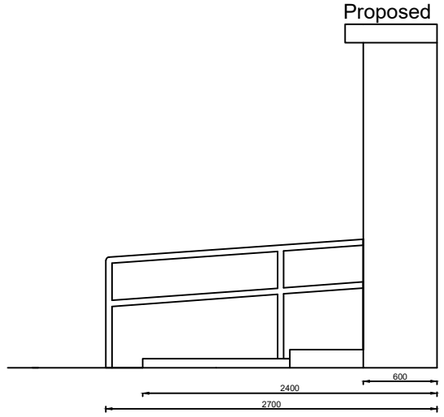

Existing

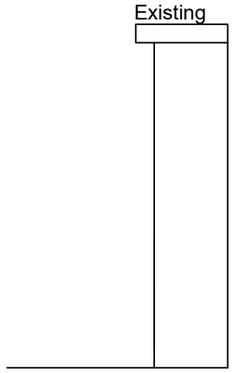

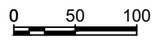

Mr Joseph Berrett
23 Wilmot Road
Shoreham-By-Sea
BN43 6BN

Access Adaptations

Scale: 1:50
Date: MAR 2021
Drawn: Zeki Kurekci

023/WIL

/03

ADUR & WORTHING HOME IMPROVEMENT ASSISTANCE
ADUR & WORTHING COUNCILS
PORTLAND HOUSE
RICHMOND ROAD
WORTHING
BN11 1HS