Everseal - ConservatoryLand
Old Mill Park
Mansfield Woodhouse
Nottinghamshire, NG19 9BG
Tel No: 01623 488 887
Fax No: 0870 123 1670

Conservatory Base Layout

Created By: tim
Last Saved By: tim
Printed By: tim

Customer Details
Matthews
8 Prince Ave
Lancing
West Sussex
BN15 8NH

TEL:
FAX:

Quote No: 52696
Ref: 52696

Date Printed: 13 September 2010 16:54

Location: Dining Room

PLANNING DIVISION
PLAN No. A2c163601w
28 SEP 2010

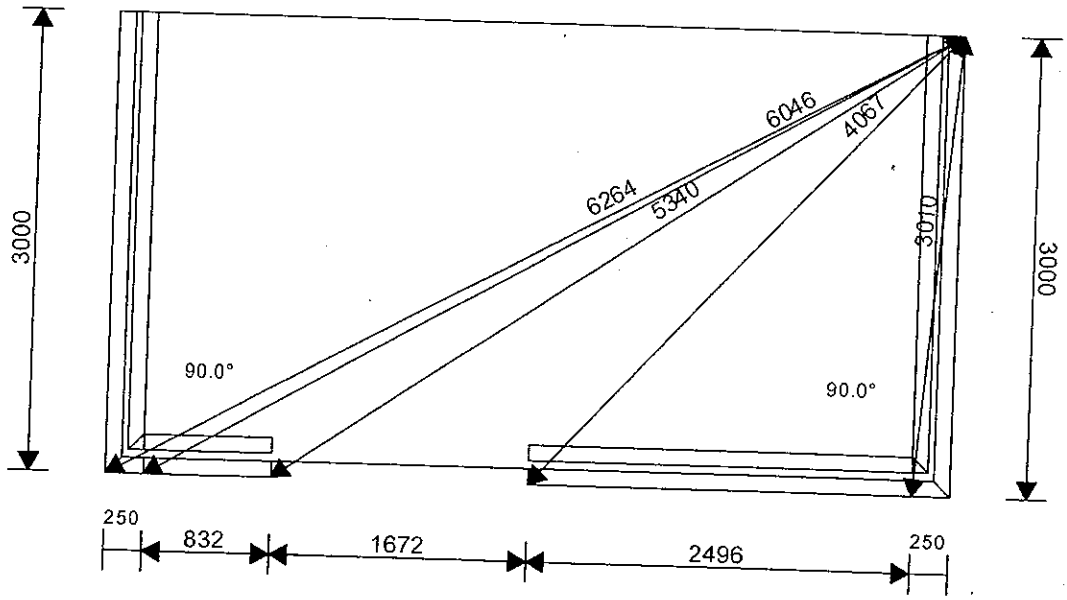

Width: 5500mm
Projection: 3000mm

Measurements are External and taken from the OUTSIDE of the EXTERNAL wall.

Dwarf wall to be 600mm high from finished floor level.
Full height wall to be 2100mm high above finished floor level.