19 Buci Cres.

Volume Calculation

Dormer:

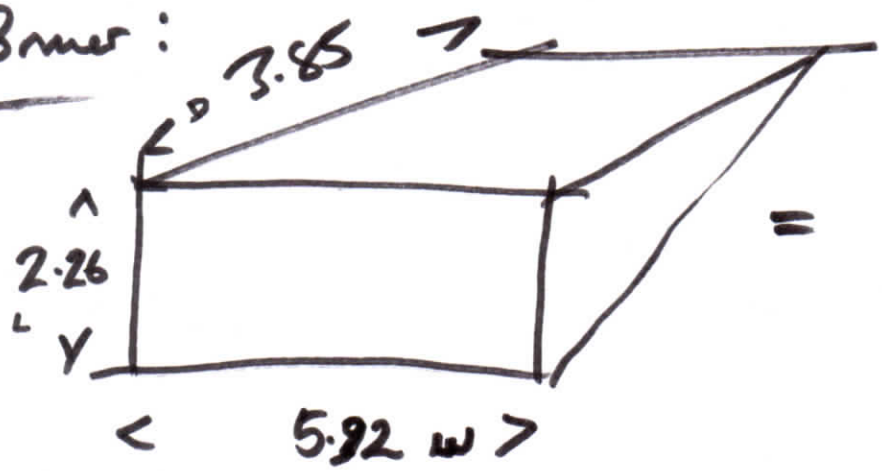

$$\frac{L \times W \times D}{2}$$

$$= \underline{25.75 m^3}$$

Gable:

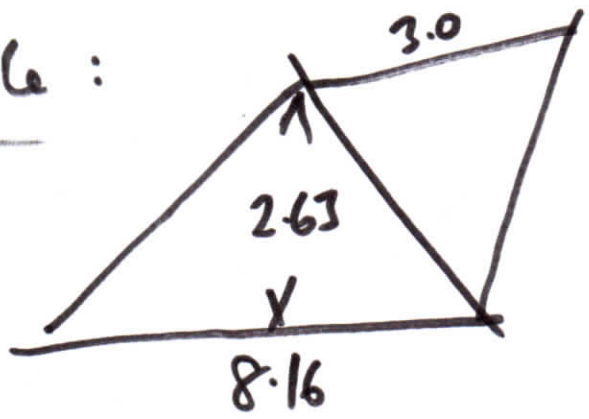

$$\frac{\frac{1}{2} b \times h \times 3}{3}$$

$$= \underline{10.73 m^3}$$

$$\therefore 25.75 + 10.73 = \underline{36.48 m^3}$$

ok ✓

under $50 m^3$