A3

NOTES

ALL DIMENSIONS TO BE CHECKED ON SITE

ALL EXISTING TIMBER SASH AND CANOPY FRAMES TO BE REPLACED WITH SIMILAR, WHITE uPVC BY ECOSlide

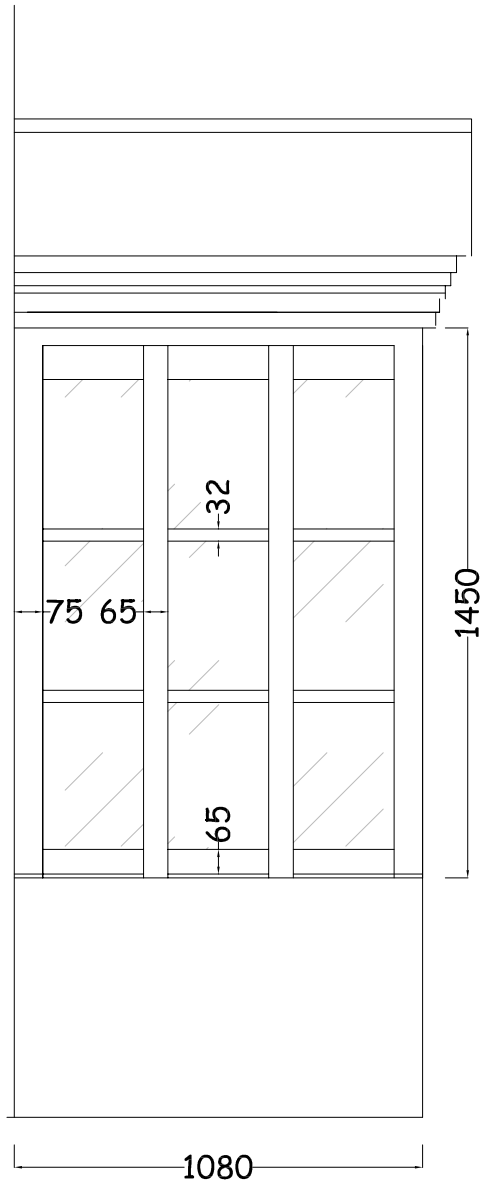

TYPICAL CAPOPY TYPE 1
LEFT AND RIGHT SIDE DETAIL 1:20

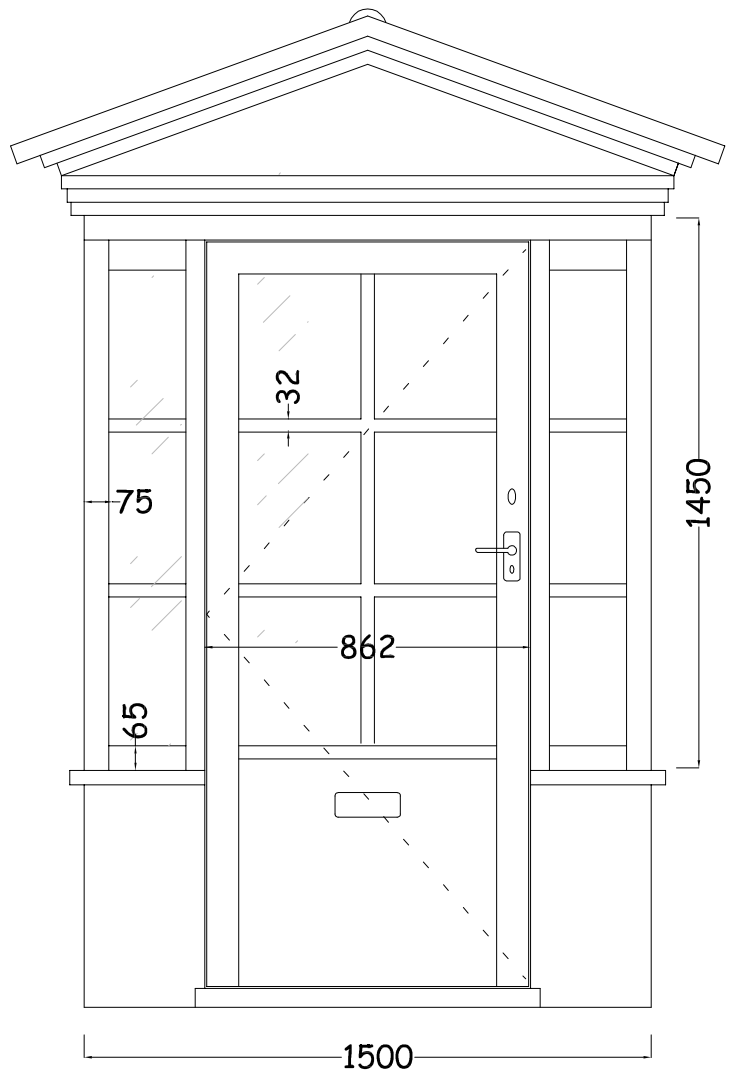

TYPICAL CAPOPY TYPE 1
FRONT DETAIL 1:20

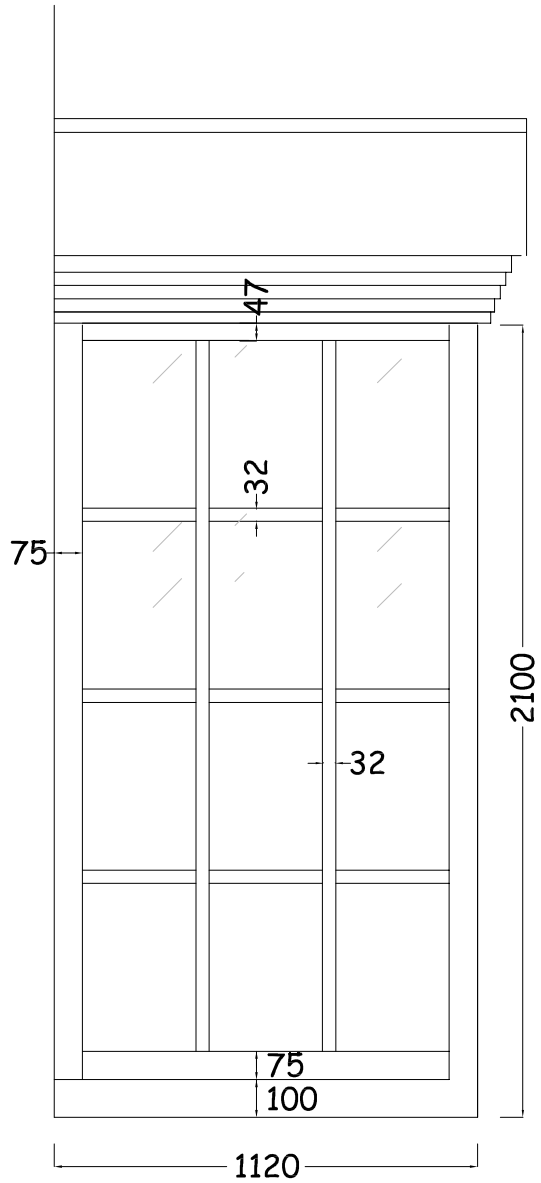

TYPICAL CAPOPY TYPE 2
LEFT AND RIGHT SIDE DETAIL 1:20

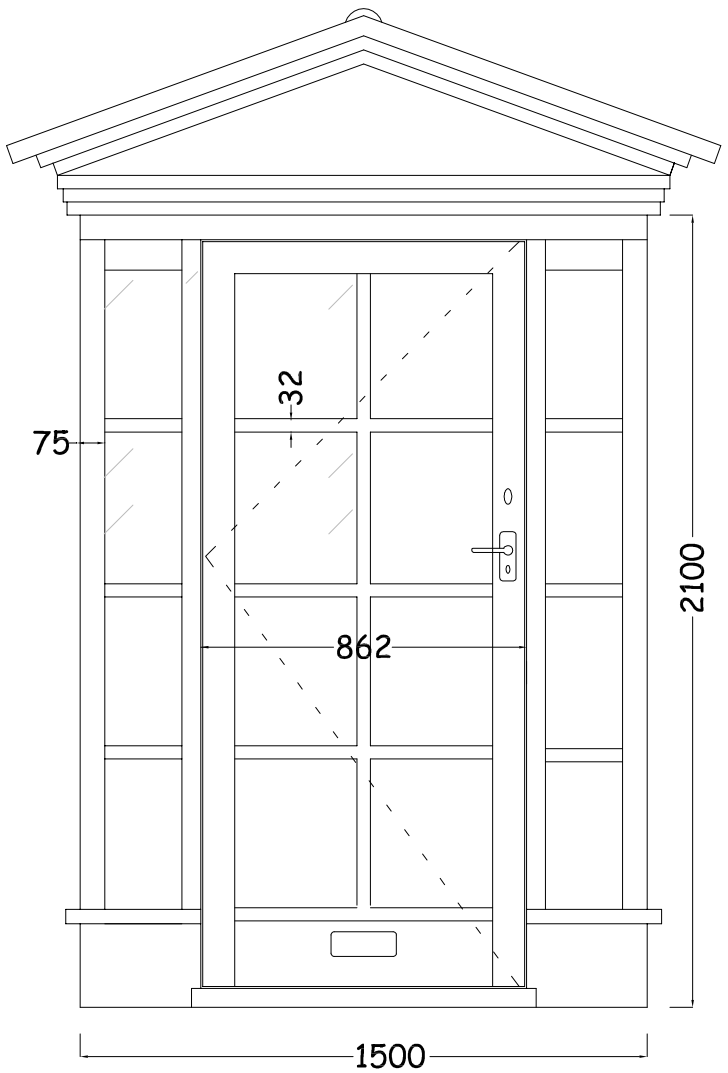

TYPICAL CAPOPY TYPE 2
FRONT DETAIL 1:20

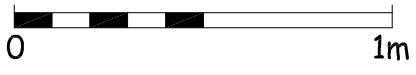

St. Mary's Close
Shoreham By Sea

Replacement Canopies
Existing and Proposed Canopy Detail

Overill Associates Ltd
Chartered Building Surveyors
RICS
5 The Drive
Hove
BN3 3JE
Tel : 01273 716896
Fax : 01273 731267

Scale 1:20 @ A3	Drg No.	Revision
Date: April 2019	SMC/7	
Drawn: JNC		