PROPOSED

W1 - GF Front RH Single Box Sash
As Viewed **Internally**
Scale: 1:20 @ A3

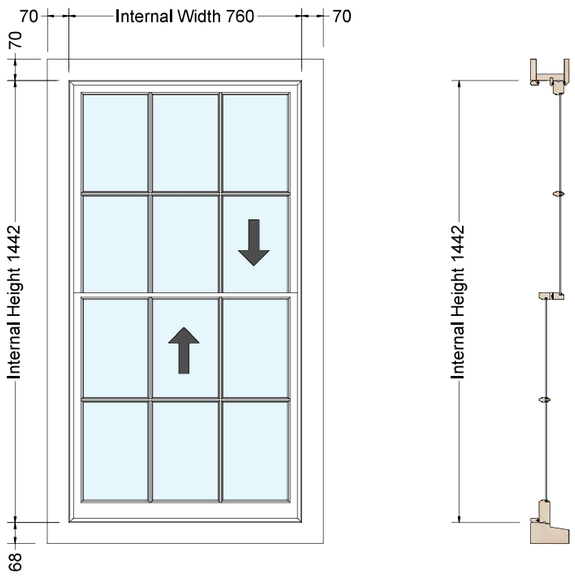

W1 - GF Front RH Single Box Sash
As Viewed **Externally**
Scale: 1:20 @ A3

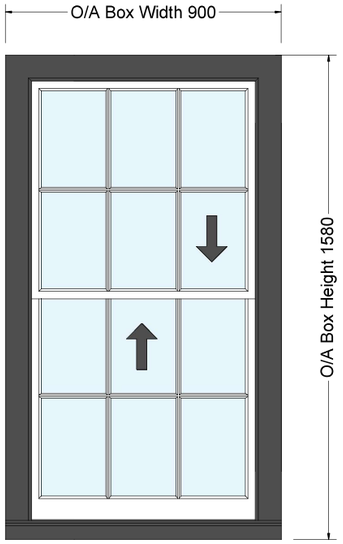

Box Frame Head & Sash Head
Section Details
Scale: 1:2 @ A3

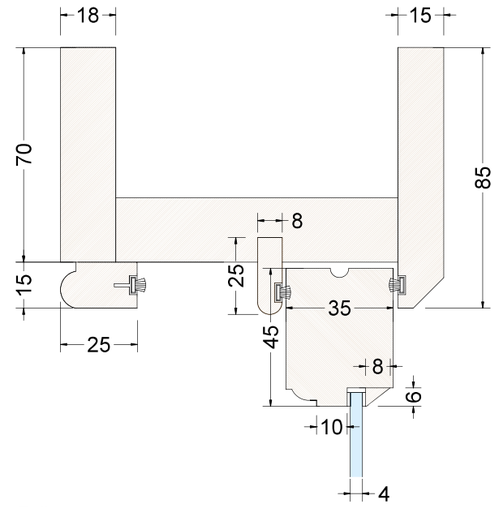

Sash Meeting Rail
Section Details
Scale: 1:2 @ A3

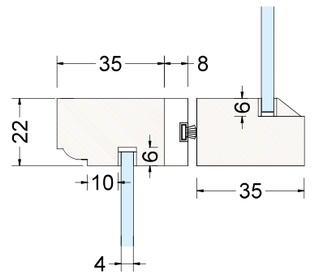

Job Reference:	Dymott
Made By Date:	TBC
Location:	W1
Quantity:	1
Timber Type:	Accoya

Box Detail:

Inside Width:	770mm
Inside Height:	1442mm
Box Thickness:	125mm
Int Head Liner:	70mm x 18mm
Ext Head Liner:	85mm x 15mm
Int Jambs Liners:	70mm x 18mm
Ext Jambs Liner:	85mm x 15mm
Frame Cill:	68mm
Add On Sill:	N/A
Trickle Vents:	N/A Listed

Sash Section Detail:

Sash Mould:	6.5R Ovolo
Sash Profile:	35mm
Sash Head:	45mm
Sash Stiles:	45mm
Sash Meeting Rail:	22mm
Sash Bottom Rail:	80mm
Glazing Bars:	16/ 6.5R Ovolo
Horns:	N/A
Horn Type:	N/A

Box Sash Window Hardware:

Ironmongery Finish:

1 x Fitch Catch
2 x Sash Lifts
2 x Rola Locks & Keys
4 x Pully Wheels

Box Frame Jamb & Sash Stile
Section Details
Scale: 1:2 @ A3

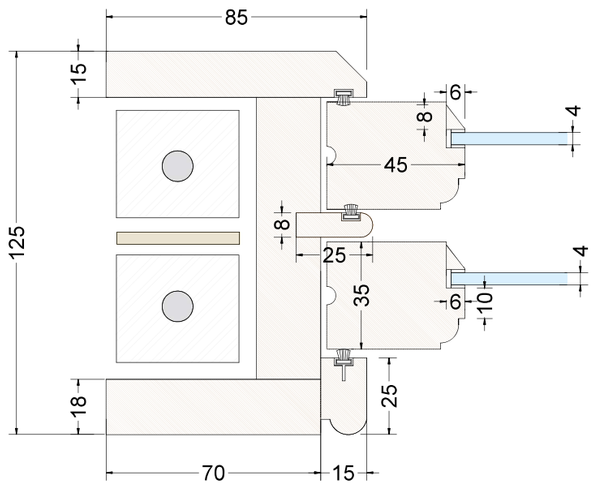

Glazing Bar
Section Details
Scale: 1:2 @ A3

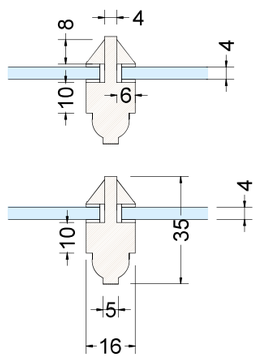

Box Sill & Sash Bottom Rail
Section Details
Scale: 1:2 @ A3

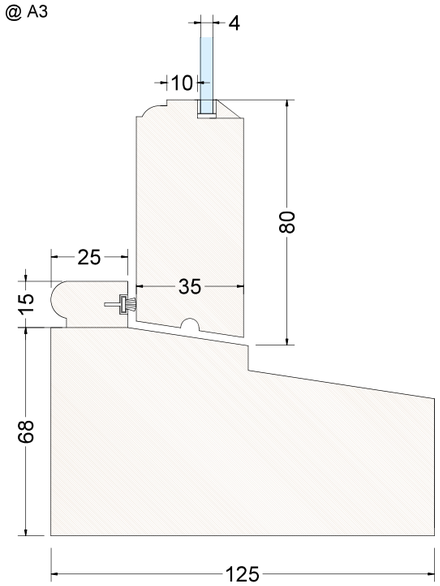

Notes:
- Drawings to show single box sash window with slimline profiles.
- Sashes are to have 4mm single glazing with 16mm integral glazing bars. Special cutters will need to be ordered.
- This window must be installed externally.

MIDHURST
Windows and Doors