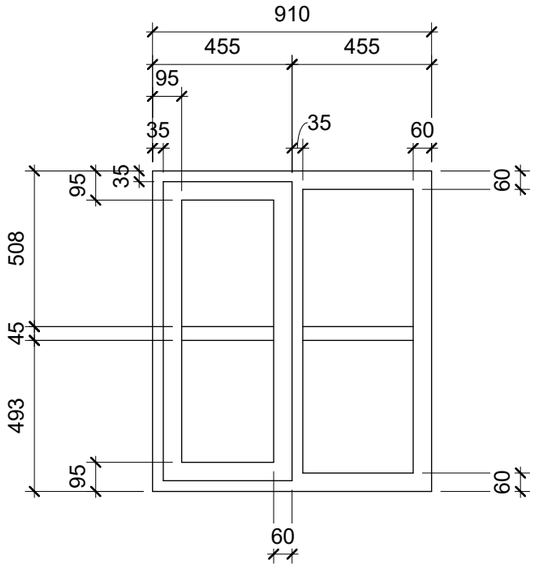

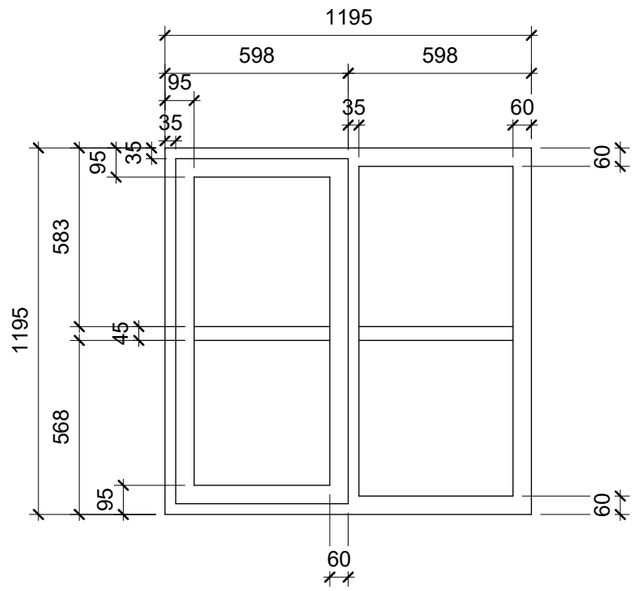

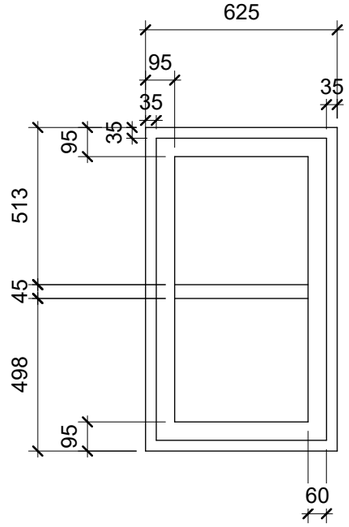

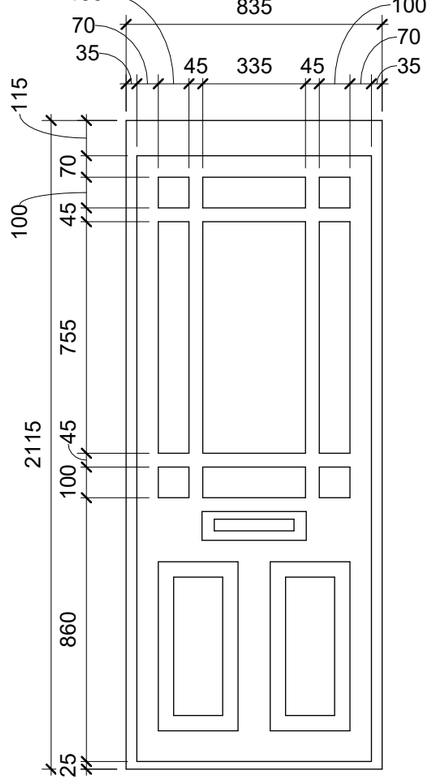

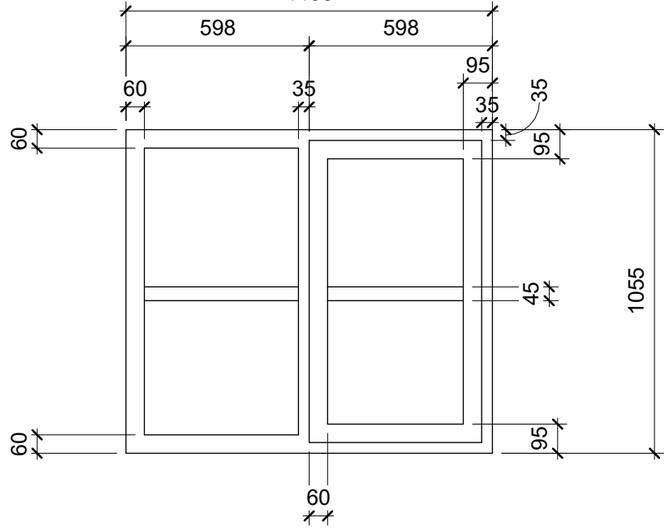

1 Existing Front Details

1 : 20

Scale 1:100

2m 0m 2m 4m 6m 8m 10m

Scale 1:50

1m 0m 1m 2m 3m 4m 5m

Contract No.

FHI 113294

Site Address -

Flat 2 Shermanbury Court
Carnforth Road
Lancing, West Sussex
BN15 9RX

Drawing No.

3 of 8

Existing Front Details

All Dimensions in mm

Scale: 1 : 20

Signed Off on - 23/02/2024

Review on - 28/02/2024

First Home Improvements
Station Road Industrial
Estate Lenwade Norfolk
NR9 5LY

© Drawings, associated documentation and intellectual property is protected under copyright law.
All documentation by First Home Improvements prohibits unauthorised actions such as (but not limited to) the re-issuing and re-production thereof without prior consent.