© this drawing is the copyright of look. design + build [ldb]
ldb design responsibility is limited to the design of the permanent works as finally constructed by ldb as part of the design + build service.

look. design | planning | build
www.lookdesignandbuild.co.uk
e: office@lookdesignandbuild.co.uk t: 01243 537 709

WINDOWS, DOORS AND FRAMES

Window and door frames to be fitted into prepared openings formed using insulated pre-formed cavity closer, overlapping by a minimum 30mm.
All windows to have openings to give a minimum of 1/20th of the floor area as rapid ventilation, providing four air changes an hour. Install trickle vents equal with a min 2500mm² equivalent area should be located in all habitable rooms (to be confirm by M.E).
All windows to be fitted with sealed double glazed units with obscure glass to bathrooms, shower rooms and cloakrooms.
Air gap within the sealed glazing units to be 16mm argon gas filled coat and soft coat low e glass. Glass thickness to be determined and fixed in accordance with the relevant british standard codes of practice.
Windows within 800mm of the finished floor level and glazing to doors within 1500mm from the finished floor level in or adjacent to a door is to be glazed with safety glass conforming to bs 6262:1982 and part n of the building regulations. All to achieve a u-value of 1.50 w/m²k.
Front doors to be fitted with multi point locking facility, and permit emergency egress without the use of a key.
Secondary entrance doors should be held closed on a latch and open-able by a handle on both sides and include a dead lock facility via key. Byfold or sliding doors should include a multi point locking facility.

WINDOWS & GLAZING

External glazing insulation to comply with U-values for external windows to achieved U-value 1.4 W/m².k (or Window energy rating as Band C of part 4.22 of ADL1B or better) and doors to achieved U-value 1.4 W/m².k (or door set energy rating Band E of part 4.22 of ADL1B or better)

CAVITY TRAYS

To be provided over the lintels to be "Cavitray" by Cavity Trays Ltd (or similar approved), bedded in sand cement mortar and lapped and sealed at all joints, laps to be a minimum 150mm, tray to extend beyond face of wall by a minimum of 10-20mm.
Cavity Trays Ltd small weep vents over at max: 900mm centres (2 weep holes minimum per lintel) (or similar approved)

LINTELS

To be Catnic CG130or similar approved) to external cavity brickwork and to have a minimum end bearing of 150mm. Lintel type requirement as engineers drawing.

DPC

Dpc fitted to jamb/cill closer either proprietary closer with a min thermal resistance path of 0.45 k/w & 30 min fire resistance

Window Schedule					
Window Number	Room Number	Room Name	Structural Opening Width	Structural Opening Height	Privacy Window
1.- Ground Floor					
W001		Office	1210 mm	1360 mm	
W002		Treatment Room	1210 mm	1360 mm	Yes
W003		Treatment Room	1210 mm	1360 mm	Yes
W004		Treatment Room	1210 mm	1360 mm	Yes
W005	1	Consulting	1210 mm	1360 mm	Yes
W006	1	Consulting	1210 mm	1360 mm	Yes
W007	2	Consulting	1210 mm	1360 mm	Yes
W008		Admin	1210 mm	1210 mm	Obscure

Roofligth Schedule		
Window Number	Structural Opening Width	Structural Opening Height
SK02	638 mm	1068 mm
SK04	1088 mm	1388 mm
SK05	1088 mm	1388 mm
SK06	1088 mm	1388 mm
SK07	1088 mm	1388 mm
SK08	1088 mm	1388 mm
SK09	888 mm	1188 mm

Curtain Wall Schedule		
Curtain Wall Number	Structural Opening Width	Structural Opening Height
CW1	7210 mm	4210 mm
CW2	1708 mm	2500 mm
CW2	3244 mm	2500 mm
CW2	1719 mm	4825 mm
CW3	75 mm	4142 mm
CW3	1748 mm	4825 mm

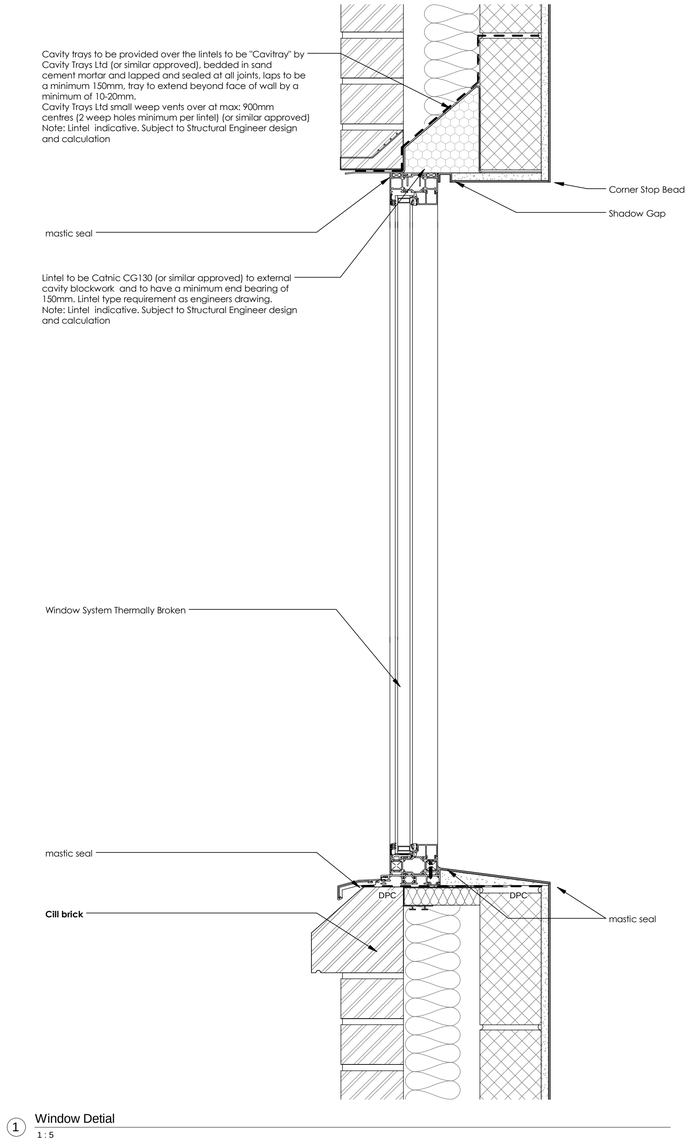

1 Window Detial
1 : 5

NOTE:

1.-Alterations to existing or new structure & existing or new roof structure, including removal of structural members etc must be in compliance with Structural Engineers details and calculations which must be approved by building control before works commence on site.

2- All dimension and details are to be checked on site prior to the commencement of work and any discrepancy is to be reported to the construction manager before construction.

3.- All work is to comply with current Building Regulation and to be confirmed by building control.

4.- All materials are to be used and installed in strict compliance with the relevant manufacturers instructions and recommendations.

5.- The drawing is not to be scaled

6.- All dimension in millimeters

7.- Read drawings in conjunction with Building Regulations Notes and Specification Notes

GENERAL NOTE

All external doors and windows to be polyester powder coated aluminium, toughened Low E safety glass to BS 6206 with Argon filled cavities.
Window units to be laminated internally and toughened externally.
Neat silicone pointing applied to internal and external perimeters of window and door frames, max 6mm.
The overall dimensions shown are Structural Openings, site dimensions of openings to supersede these.
All external windows to be supplied by Aluk Window systems.
All External Windows and Doors to have Solar Controlled Glazing.

All internal glass vision panels and fanlights to be CGI Pyroguard (FR)

All doors to consulting rooms and back office to have security keypad's.

All doors that lead onto public corridors to have vision panels

Rev	Date	Description
A	18/07/2016	Plan revised to suit Planning Condition X of Planning Permit AWDM/0318/16

DATE January
SCALE @ A1 1 : 5
STATUS Building Regulations
DWG No. T - 194- 254 -A

PROJECT TITLE
EXTENSION TO NEW POND ROW SURGERY

DRAWING TITLE
WINDOWS/CURTAIN WALL DETAILS

© this drawing is the copyright of look. design + build [ldb]
ldb design responsibility is limited to the design of the permanent
works as finally constructed by ldb as part of the design + build service.

look. design | planning | build
www.lookdesignandbuild.co.uk
e: office@lookdesignandbuild.co.uk t: 01243 537 709

KEY

Altro Walkaway 20 Temple

Altro Walkaway 20 River

Altro Walkway 20 Winter

Altro wood safety oak traditions (to have a dove grey skirting)

Barrier Matting 'Burmatex' grimebuster 50 'wincanton fawn'

NOTE:

1.-Alterations to existing or new structure & existing or new roof structure, including removal of structural members etc must be in compliance with Structural Engineers details and calculations which must be approved by building control before works commence on site.

2- All dimension and details are to be checked on site prior to the commencement of work and any discrepancy is to be reported to the construction manager before construction.

3.- All work is to comply with current Building Regulation and to be confirmed by building control.

4.- All materials are to be used and installed in strict compliance with the relevant manufacturers instructions and recommendations.

5.- The drawing is not to be scaled

6.- All dimension in millimeters

7.- Read drawings in conjunction with Building Regulations Notes and Specification Notes

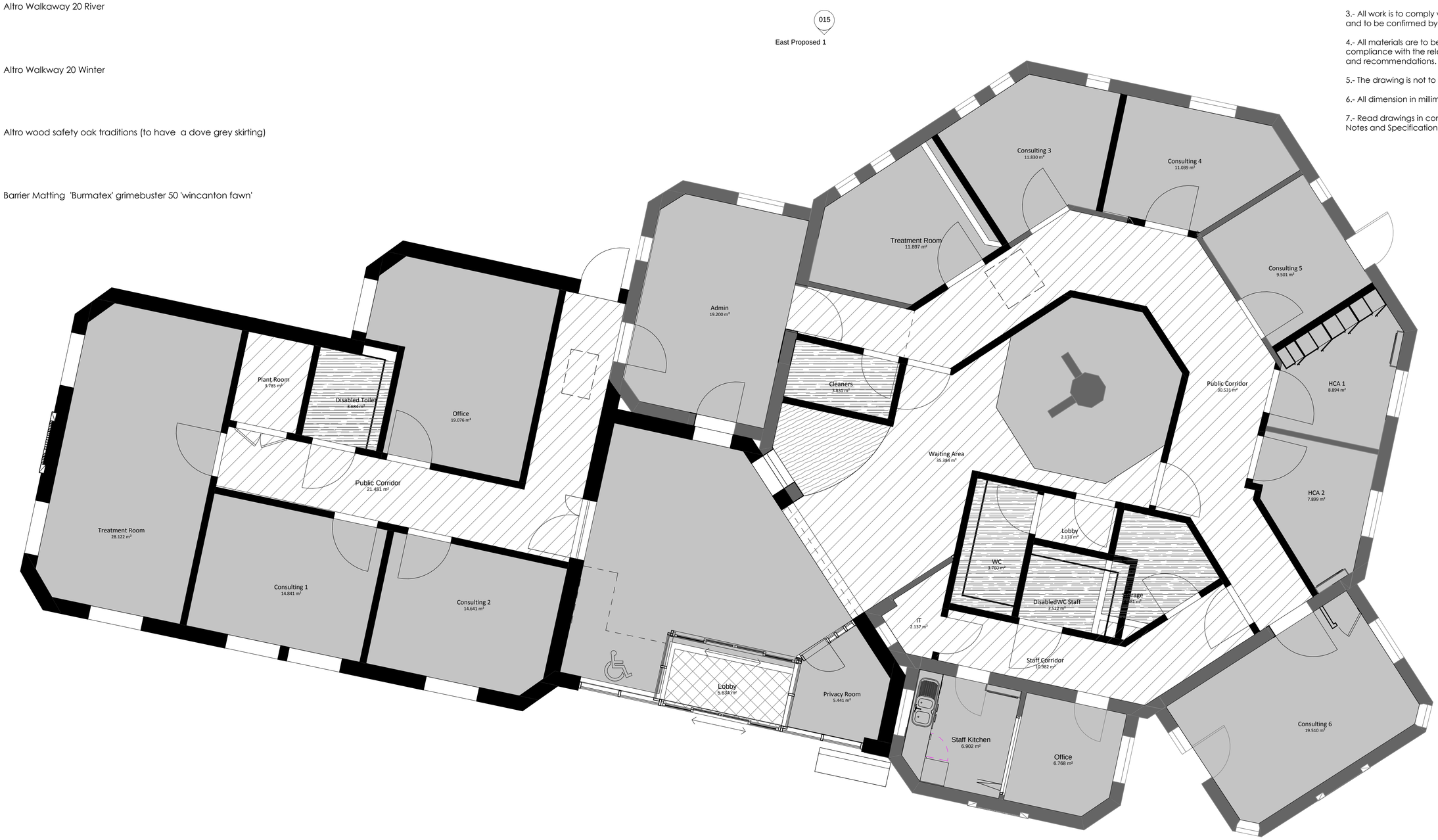

18/07/2016 Plan created to suit Planning Condition X of Planning Permit AWDM/0318/16

Rev	Date	Description

DATE January
SCALE @ A1 As indicated
STATUS Building Regulations
DWG No. **T - 194- 260**

PROJECT TITLE
EXTENSION TO NEW POND ROW SURGERY

DRAWING TITLE
FLOOR FINISHES PLANS

© this drawing is the copyright of look. design + build [l.db]
l.db design responsibility is limited to the design of the permanent works as finally constructed by l.db as part of the design + build service.

look. design | planning | build
www.lookdesignandbuild.co.uk
e: office@lookdesignandbuild.co.uk t: 01243 537 709

KEY

'GYPSUM' MF plasterboard ceiling system - K40

Gypsum Plasterboard - Gyproc SoundBloc to new extension

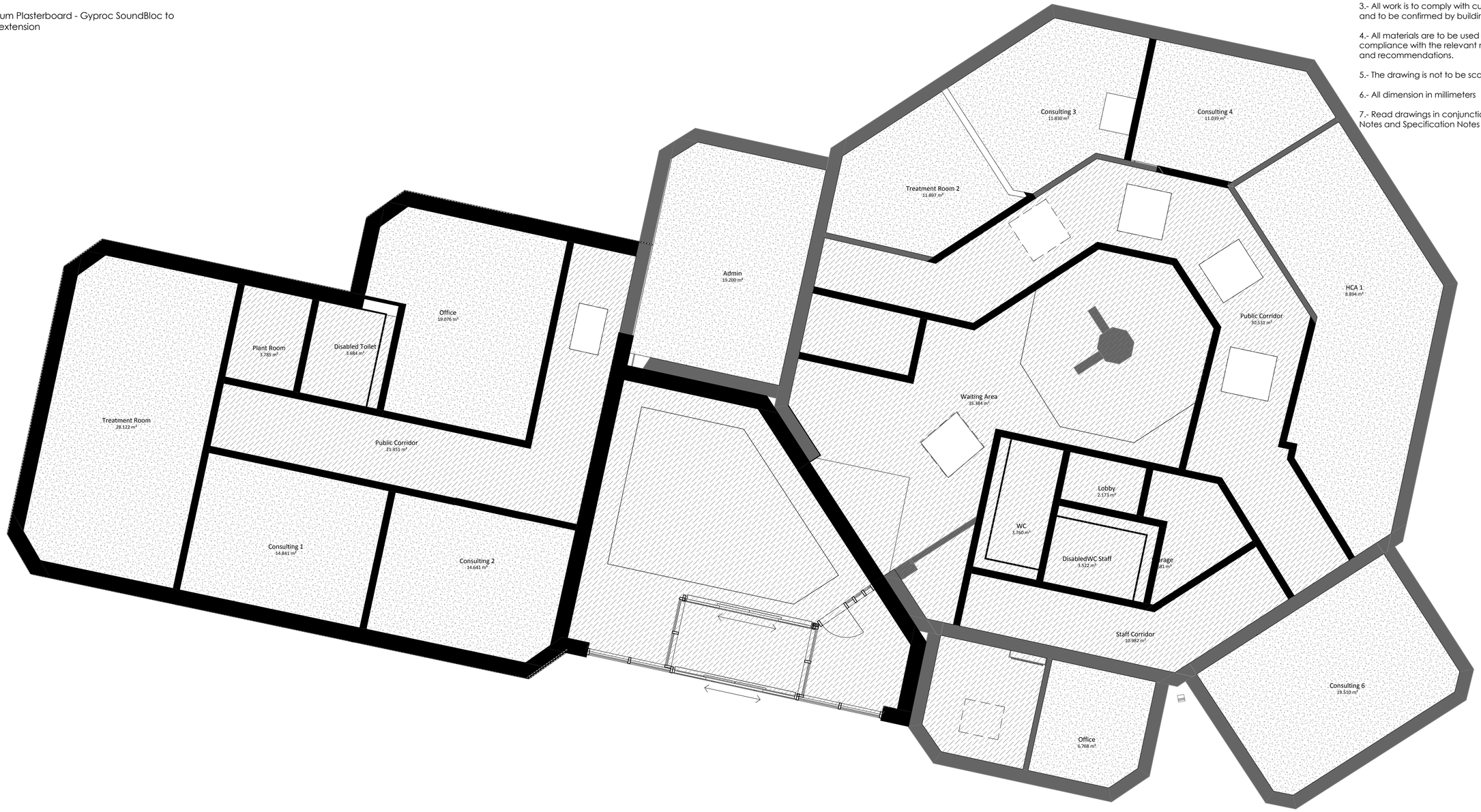

NOTE:

1.-Alterations to existing or new structure & existing or new roof structure, including removal of structural members etc must be in compliance with Structural Engineers details and calculations which must be approved by building control before works commence on site.

2- All dimension and details are to be checked on site prior to the commencement of work and any discrepancy is to be reported to the construction manager before construction.

3.- All work is to comply with current Building Regulation and to be confirmed by building control.

4.- All materials are to be used and installed in strict compliance with the relevant manufacturers instructions and recommendations.

5.- The drawing is not to be scaled

6.- All dimension in millimeters

7.- Read drawings in conjunction with Building Regulations Notes and Specification Notes

18/07/2016 Plan created to suit Planning Condition X of Planning Permit AWDM/0318/16

Rev	Date	Description

DATE January
SCALE @ A1 As indicated
STATUS Building Regulations
DWG No. **T - 194- 262**

PROJECT TITLE
EXTENSION TO NEW POND ROW SURGERY

DRAWING TITLE
REFLECTING CEILINGS PLANS

© this drawing is the copyright of look. design + build [l.db]
l.db design responsibility is limited to the design of the permanent works as finally constructed by l.db as part of the design + build service.

NOTES

All existing boundary fencing to be replaced. To be hit and miss timber fencing or similar approved

look. design | planning | build
www.lookdesignandbuild.co.uk
e: office@lookdesignandbuild.co.uk t: 01243 537 709

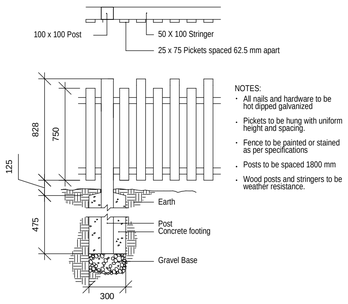

2 Front Fence
1 : 25

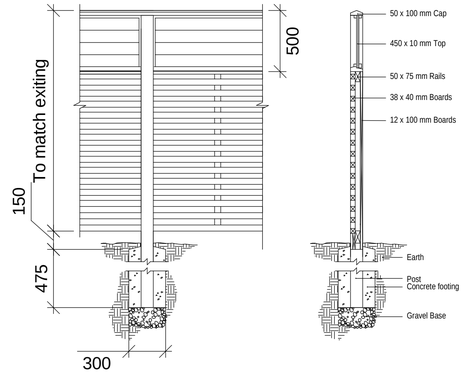

Foundations to new fence to Structural Engineers design & detail.

3 Fence
1 : 25



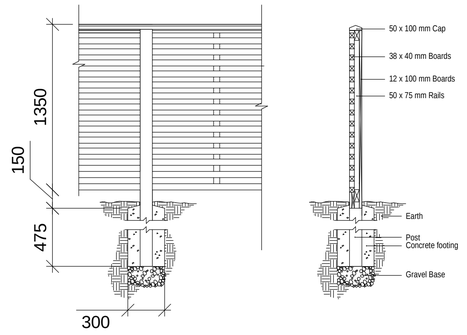

Foundations to new fence to Structural Engineers design & detail.

4 Built bin storage to screen
1 : 25

NOTE:

1.-Alterations to existing or new structure & existing or new roof structure, including removal of structural members etc must be in compliance with Structural Engineers details and calculations which must be approved by building control before works commence on site.

2- All dimension and details are to be checked on site prior to the commencement of work and any discrepancy is to be reported to the construction manager before construction.

3.- All work is to comply with current Building Regulation and to be confirmed by building control.

4.- All materials are to be used and installed in strict compliance with the relevant manufacturers instructions and recommendations.

5.- The drawing is not to be scaled

6.- All dimension in millimeters

7.- Read drawings in conjunction with Building Regulations Notes and Specification Notes

Scale1:100

0 2 4 6 8 10 m

Scale1:25

0 1 2 3 4 5 m

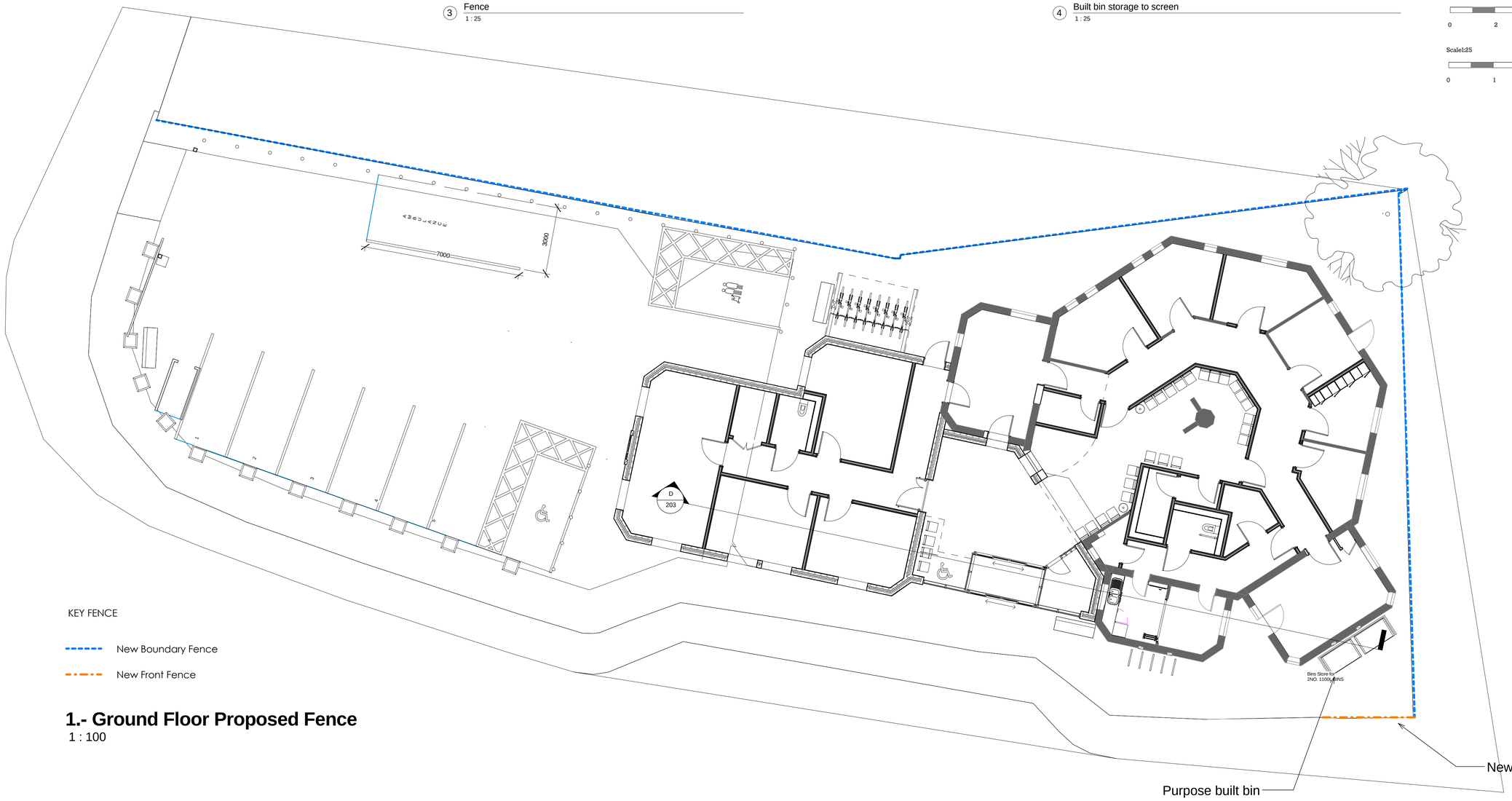

KEY FENCE

New Boundary Fence

New Front Fence

1.- Ground Floor Proposed Fence

1 : 100

18/07/2016 Plan created to suit Planning Condition X of Planning Permit AWDM/0318/16

Rev	Date	Description

DATE January
SCALE @ A1 As indicated
STATUS Building Regulations
DWG No. T - 194- 300

PROJECT TITLE
EXTENSION TO NEW POND ROW SURGERY

DRAWING TITLE
FENCE DETAILS