Current/Old Window

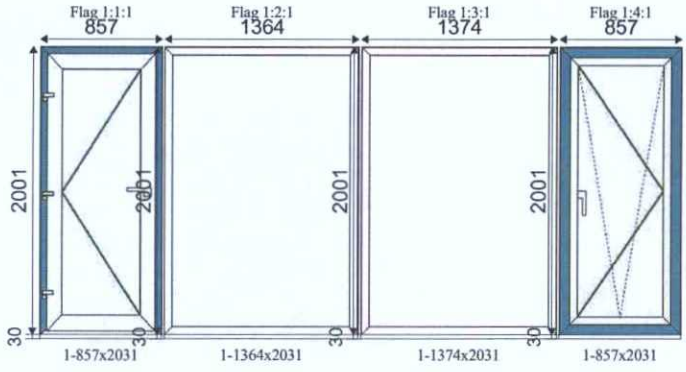

New Window - Option

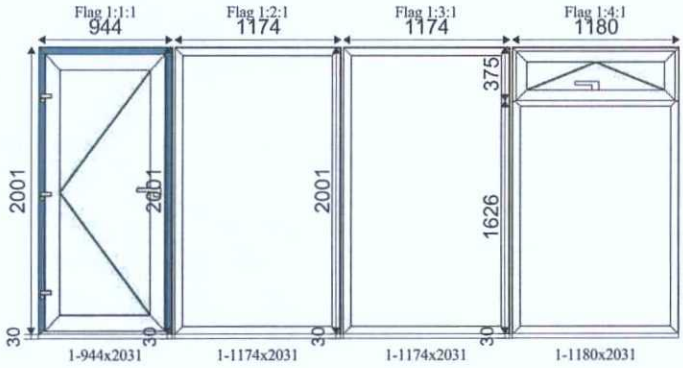

New Window - Option 2 - Without opener

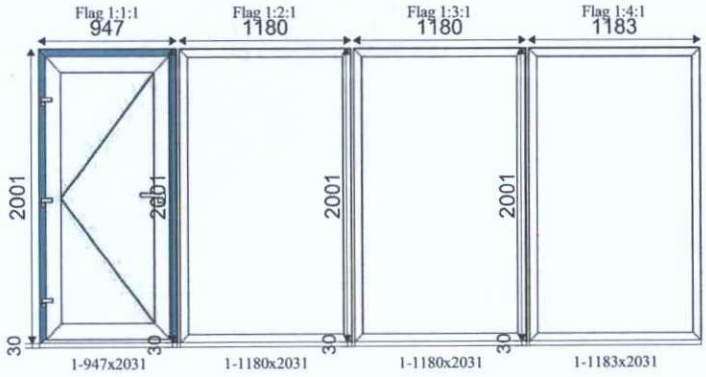

ADUR & WORTHING PLANNING SERVICES	
PLAN	AWDM/ 1029/16
DATE VALID	- 8 JUL 2016