Qty	Description	Drg No	Approx Weight (Each)
2	Apollo end frame	BXMW/AP/EF/2.00 [D]	80.5Kg
3	Std 4.1m Newcastle purlin (4037lg 60x60x3.2thk SHS)	UNV/NEW/4100/S/001[A]	22.2Kg
6	Apollo trimmers	UNV/APJ/R/001 [B]	7.3Kg
4	Apollo PET roof sheets 2830 x 1020 x 5thk	UNV/APJ/C/2.00 [A]	
3	Apollo coverstrip 2835 x 60 x 2thk Galvanised	UNV/STD/C/002 []	

DO NOT SCALE - IF IN DOUBT ASK

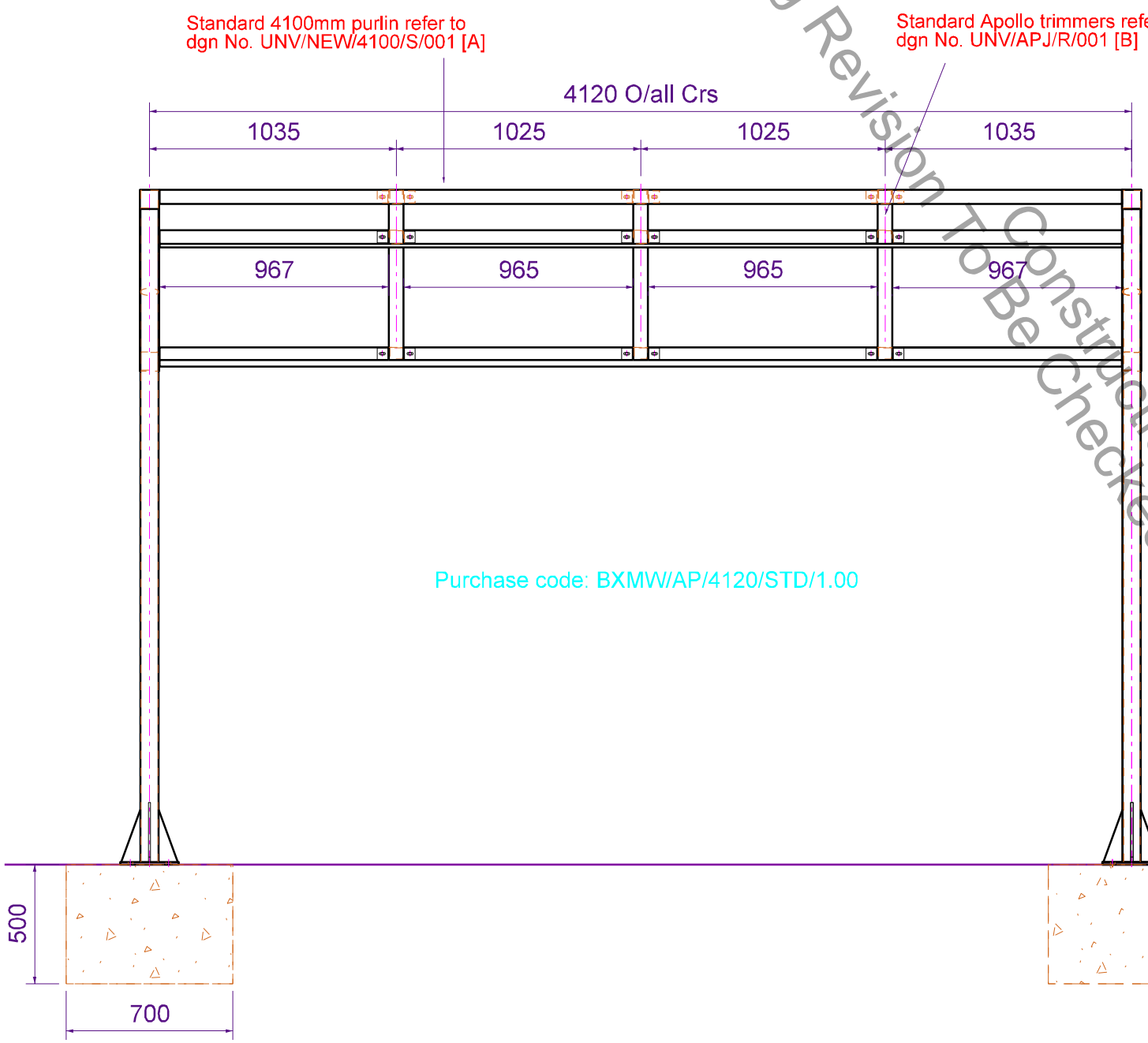

Purchase code: BXMW/AP/4120/STD/1.00

Front Elevation

SCALE 1:25 @ A3

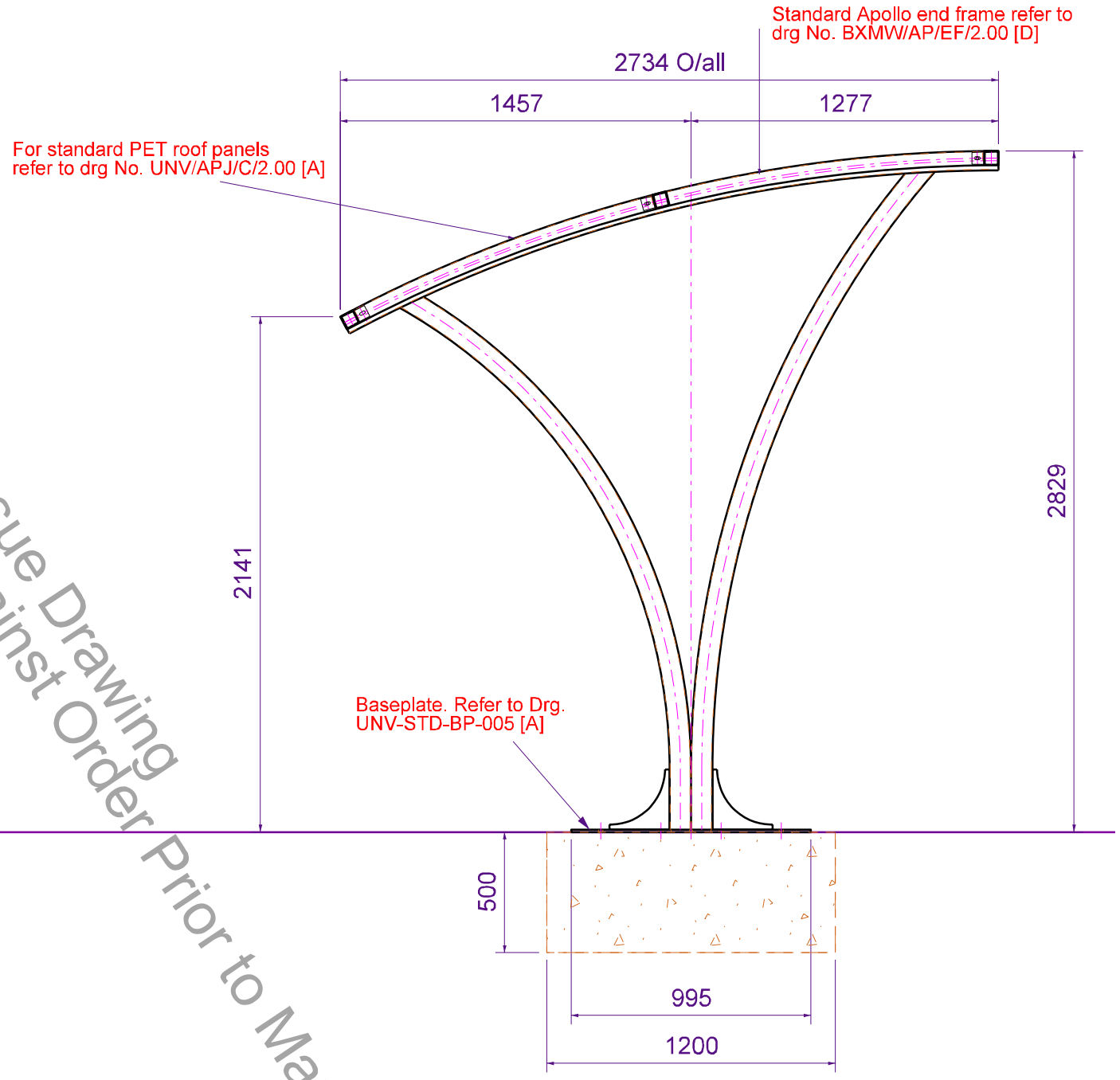

Side View

SCALE 1:25 @ A3

Drawing Revision To Be Checked And Against Order Prior to Manufacture
Construction Issue Drawing

No.	revision	date	by	check by
[A]	Title block amended & shelter adjusted to correct size	12/09/06	JL	>
[B]	EXTRA TRIMMERS ADDED & BASEPLATE GUSSETS ADDED	4.4.07	ADL	>
[C]	Gussets added to end frames.	11/07/07	RJM	RJM
[D]	End frame changed to suit new design, checked and issued for construction	13/05/08	D.J.C	R.J.M
[E]	Weights added	07/10/08	AK	>
[F]	Foundation Increased From 200mm to 500mm	17/08/09	DW	>

Directory Path
F:\Broxap Mawrob\1. Std Products\1. Shelters\BX-MW-AP Apollo

Fabrication Tolerances

0mm - 300mm	= +/- 0.5mm
301mm - 1000mm	= +/- 1.0mm
1001mm - 2500mm	= +/- 1.5mm
2501mm - 5000mm	= +/- 2.0mm
5001mm - 10000mm	= +/- 2.5mm

Unless stated otherwise

Rolling Tolerance to BS EN 10210

1st Angle Projection

DO NOT SCALE

ALL DIMENSIONS ARE TO BE CHECKED ON SITE WITH ALLOWANCES FOR VARIATIONS DUE TO NORMAL MANUFACTURING TOLERANCES

DRAWING ERRORS OR OMISSIONS ARE TO BE REPORTED AND CHECKED WITH DESIGN OFFICE

WHERE ITEMS ARE DRAWN AS ASSEMBLIES THESE ITEMS MUST BE TRIAL ASSEMBLED IN WORKSHOP BY MANUFACTURER TO ENSURE CORRECT FIT

NONE OF THE WORK CONTENT SHOWN IN THIS DRAWING FOR ANY COMPANY MAY PROCEED UNTIL APPROVED COPIES ARE DISTRIBUTED AND CLEARLY MARKED "ISSUED FOR CONSTRUCTION"

THIS DRAWING IS COPYRIGHT AND NO PORTION SHOULD BE COPIED OR REPRODUCED WITHOUT THE CONSENT OF BROXAP LIMITED

broxap
Design and Head Office, Rowhurst Industrial Estate, Chesterton, Newcastle-under-Lyme, Staffordshire ST5 6BD.
Tel : (01782) 564411 Fax : (01782) 564312

Project: *Standard Products*

Sheet title: *4120mm Long Apollo Shelter*

Drg No.	scale	date	ORD No
BX-MW-AP-4120-STD-1.00 [F]	1:25 @ A3	13.03.08	*Standard*
	drawn G Biddulph	chkd R.McGORIE	