Existing windows / Door 1:20

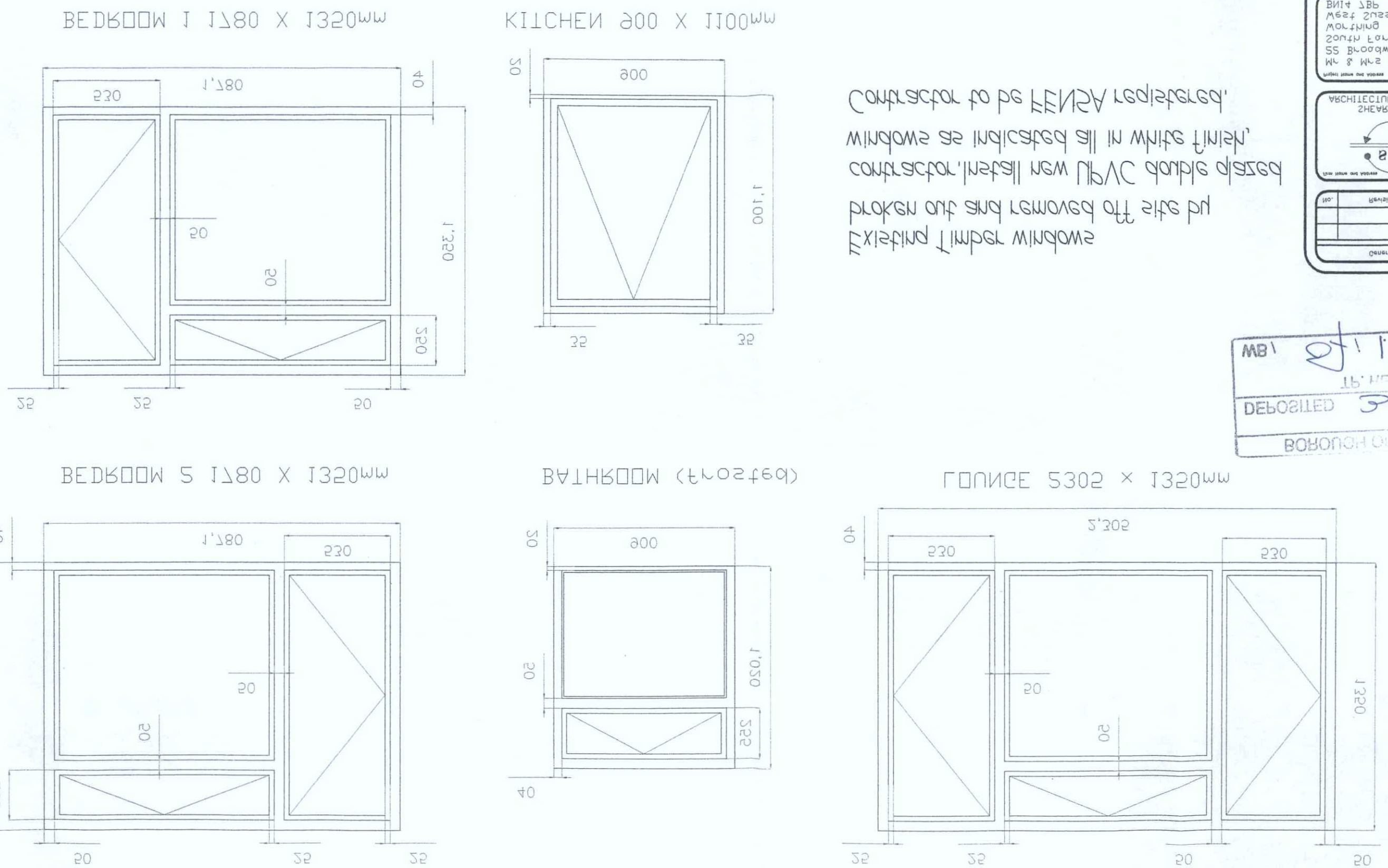

Existing timber windows
proken out and removed off site by
contractor. Install new UPVC double glazed
windows as indicated all in white finish.
Contractor to be FENSA registered.

Project	07/083
Date	25.10.07
Scale	1:50
Sheet	SK 1

Project name and address
Mr & Mrs Watts
55 Broadwater Hall
South Farm Road
Worthing
West Sussex
BN14 7BP

ARCHITECTURAL DESIGNER
SHEAR DESIGN

Firm name and address

No.	Revision/Issue	Date

General Notes

WB
DEPOSITED
BOROUGH OF WORTHING
T.P. OFFICE COPY

Proposed windows / Door 1:20

BEDROOM 1 1780 X 1320mm

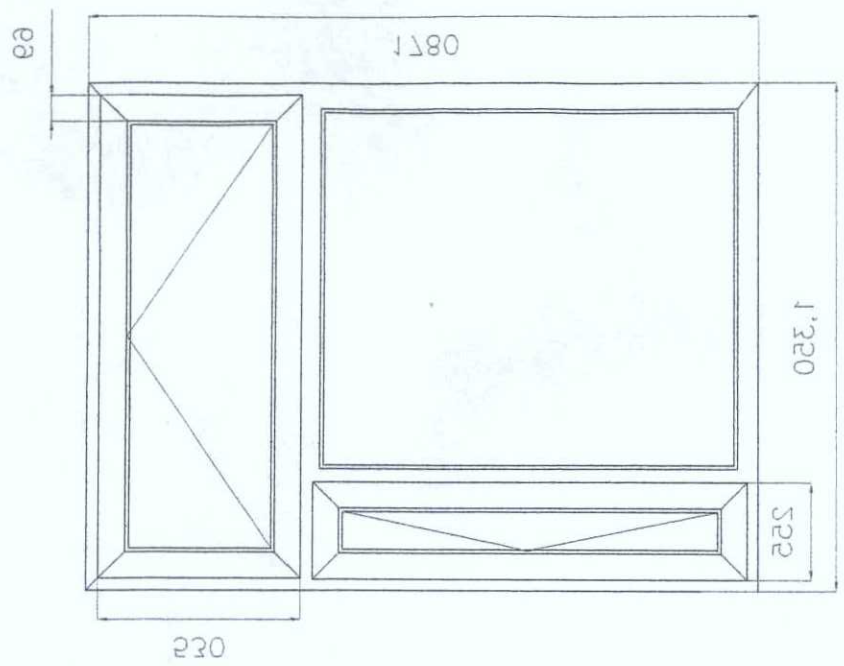

KITCHEN 900 X 1100mm

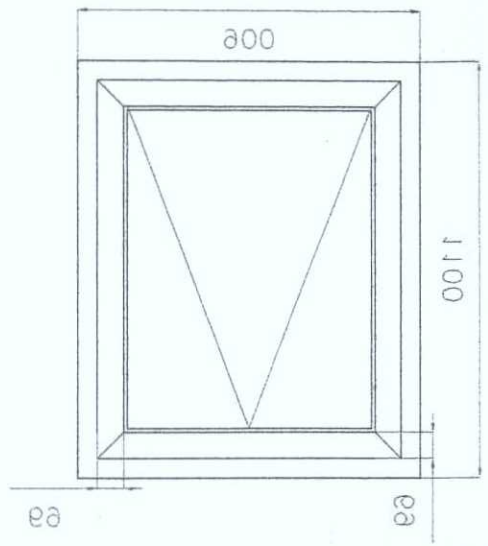

SUBJECT TO CONDITIONS
CONSENT GRANTED
3 1 MAR 2008
WORTHING BOROUGH COUNCIL

Project	07/083
Date	25.10.07
Scale	1:50
Sheet	SK 5

Project name and address
Mr & Mrs Watts
55 Broadwater Hall
South Farm Road
Worthing
West Sussex
BN14 7BP

ARCHITECTURAL DESIGNER
SHEAR DESIGN

Firm name and address

No.	Revision/Issue	Date

General Notes

WB 1 27.1.3.20
DEPOSITED 3.1.2.27
BOROUGH OF WORTHING

BEDROOM 5 1780 X 1320mm

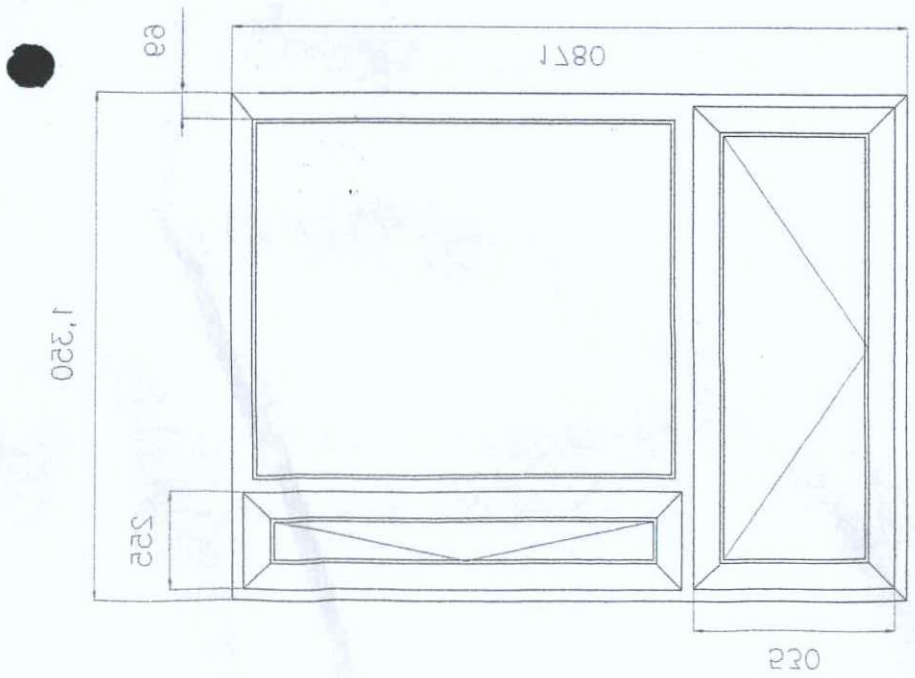

BATHROOM (Proofed)

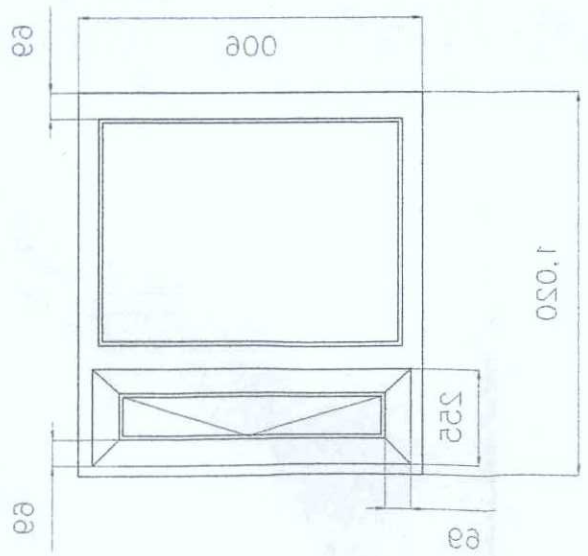

BEDROOM 1 1780 X 1320mm

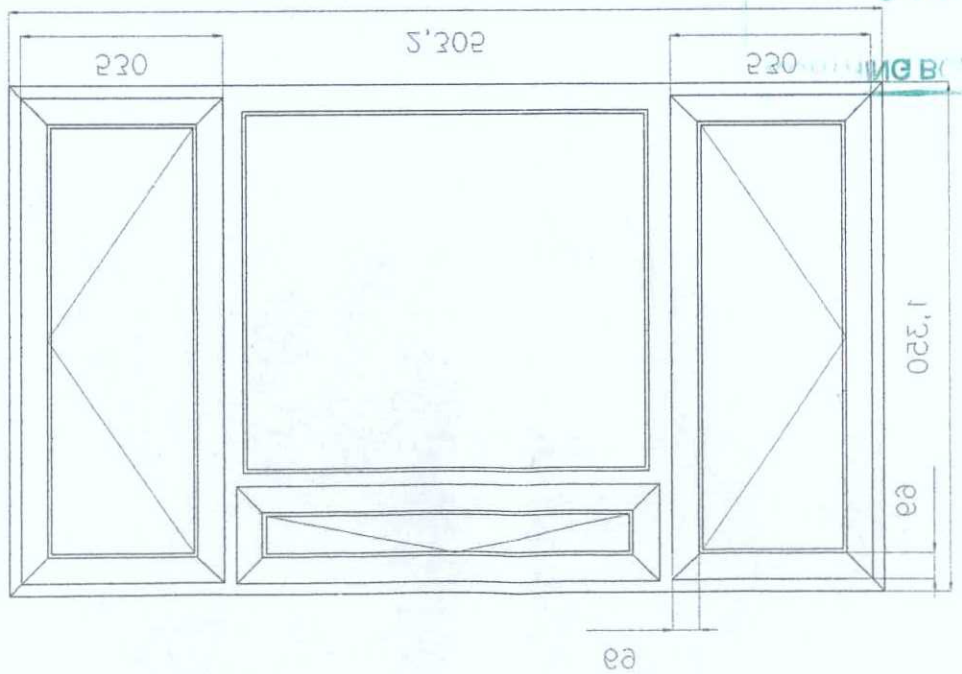

CONS
3 1 MAR 2008
WORTHING BOROUGH COUNCIL

T.P. OFFICE COPY

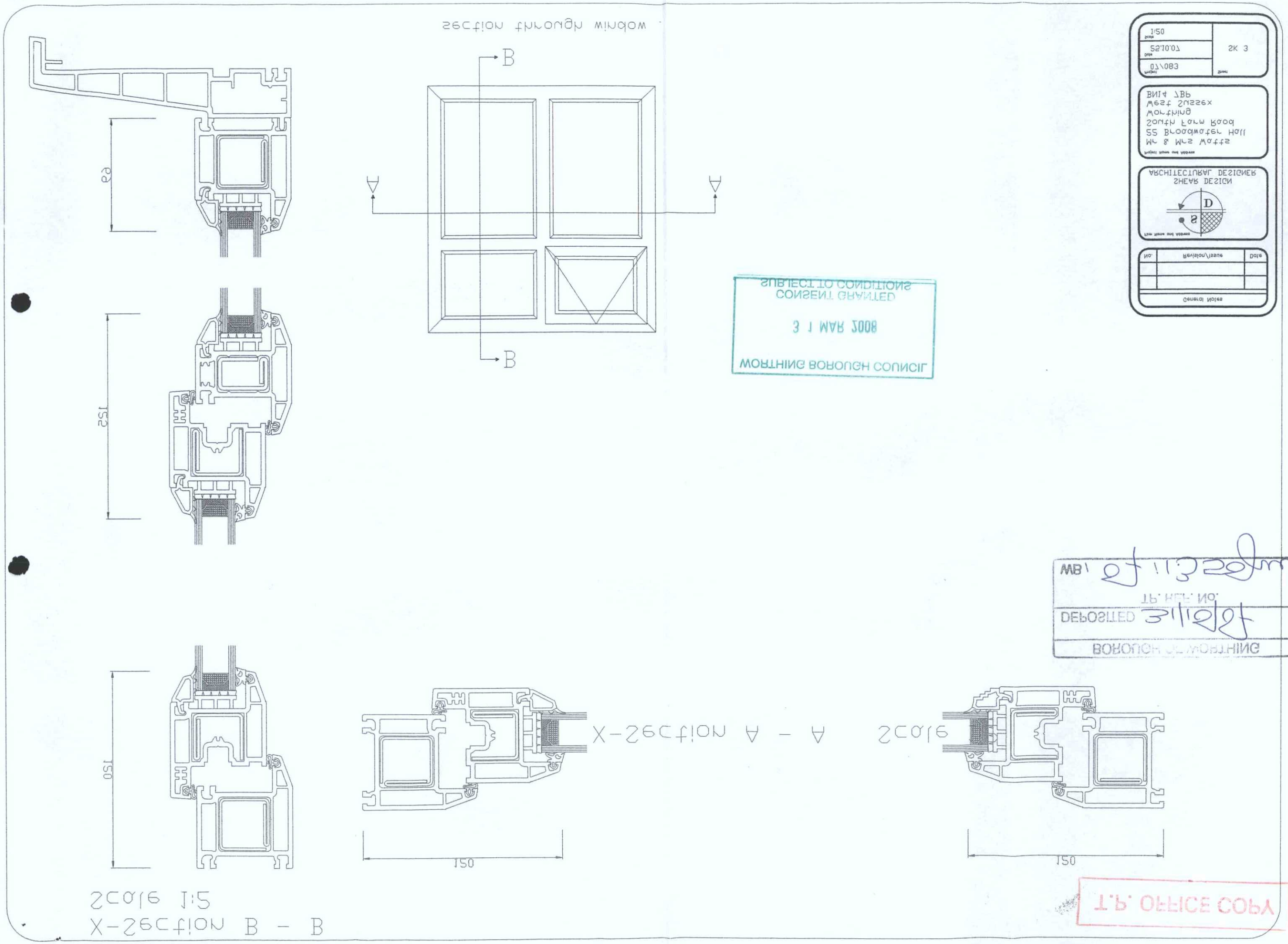

Section through window
B
A
A
B
152
150
150
150
X-Section A - A
Scale
Scale 1:5
X-Section B - B
SUBJECT TO CONDITIONS
CONSENT GRANTED
31 MAR 2008
WORTHING BOROUGH COUNCIL
MB
DEPOSITED
BOROUGH OF WORTHING
T.P. OFFICE COPY