Elevation C

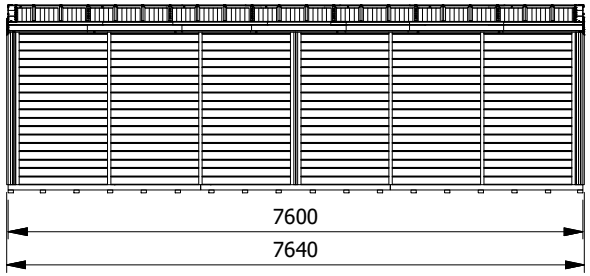

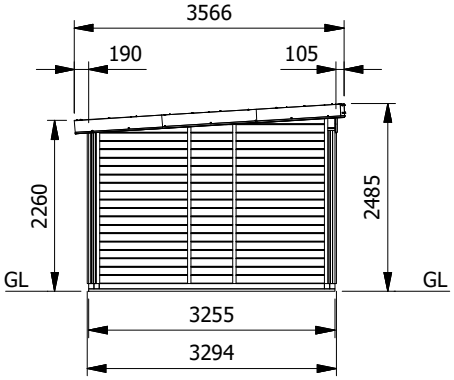

Elevation D

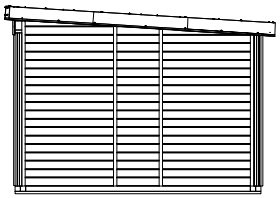

Elevation B

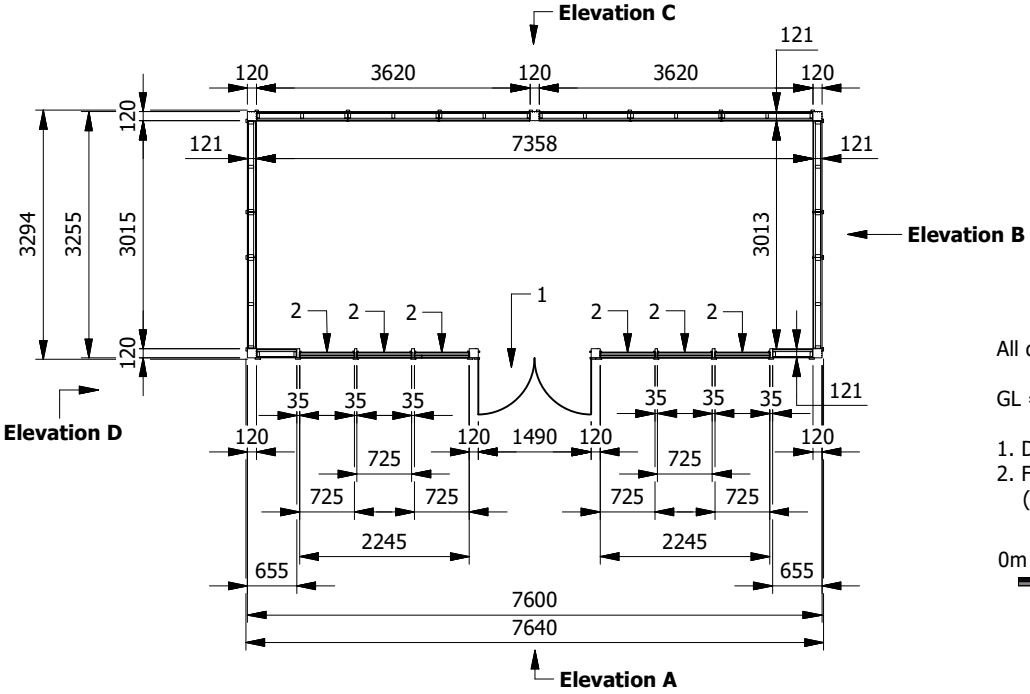

All dimensions are in millimetres and are approximate.

GL = Ground Level

1. Double door recess.
2. Full height glazed window recess.
   (Lower - fixed / upper - opening).

0m 1m 2m 3m

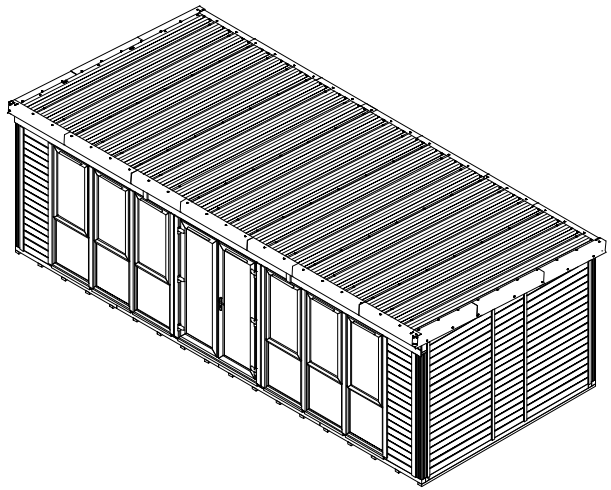

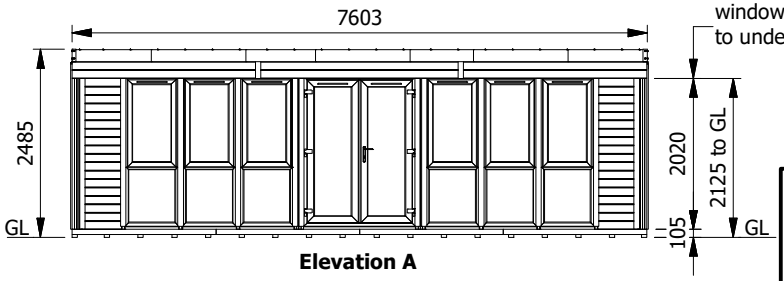

Elevation A

Dunster House Ltd.
Caxton Road
Bedford
MK41 0LF
tel 01234 272445 Fax 01234 272588 www.dunsterhouse.co.uk

DRAWING TITLE

Garden Office
Titania
7.6m x 3.3m (121mm)
with Grey UPVC

IF IN DOUBT, PLEASE ASK.

SCALE	DATE	DRAWN	DRAWING No	REV
1:100	15-07-19	SarahC	SO194610	0