TITLE:

3 Bay 2 Charger

Osprey

Osprey Charging Network Ltd
3rd Floor, Martin House
5 Martin Lane, EC4R 0DP

1:100	TL	V2	16/06/23
SCALE AT A3.	DRAWN.	REVISION.	DATE.

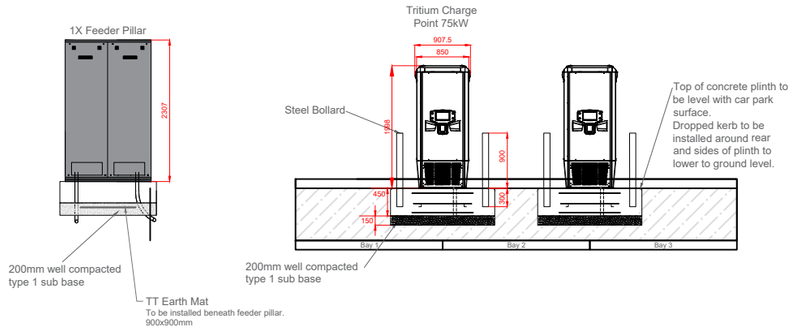

Front View (1:100)

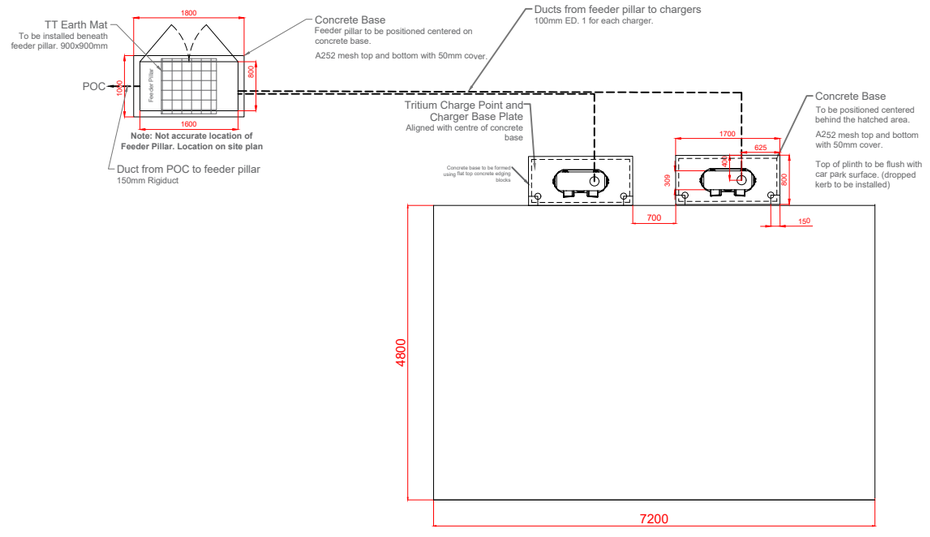

1:100

2m 0 2m 4m 6m 8m 10m

Top View (1:100)