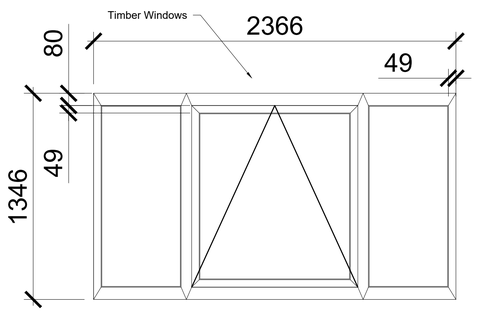

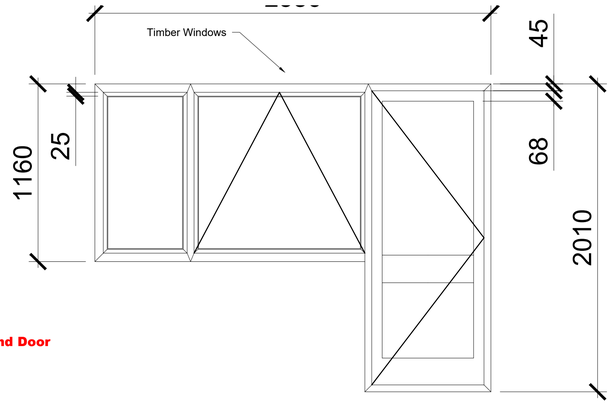

Existing Timber Framed Windows and Door
Scale: 1:20

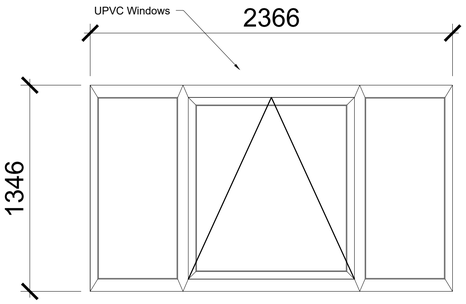

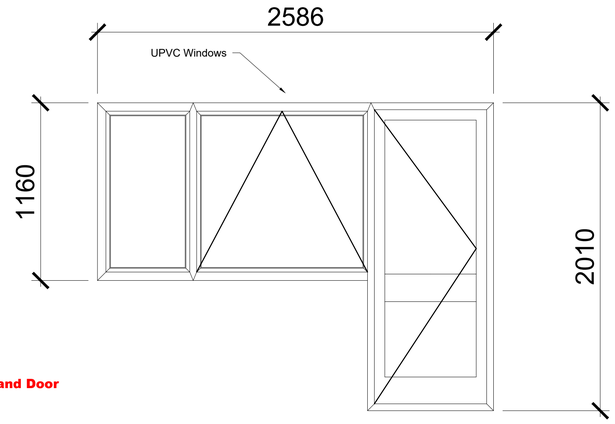

Proposed UPVC Framed Windows and Door
Scale: 1:20

Proposed windows and door will be to clients spec, but, will be within existing overall dimensions

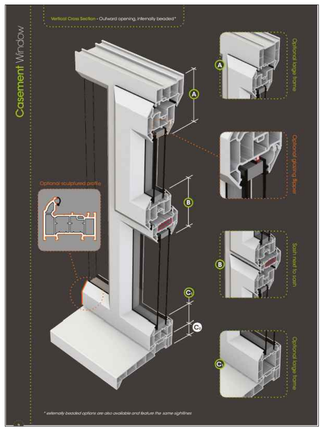

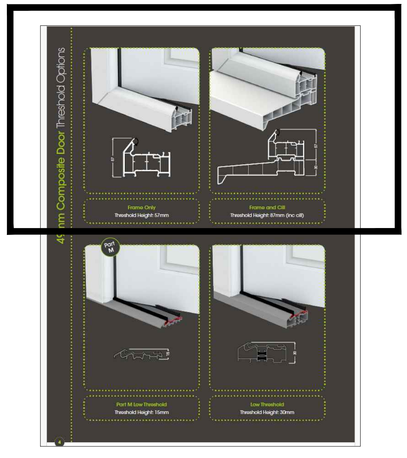

Proposed casement window section and UPVC door threshold section,
See attatched PDF's for suppliers details and dimensions.

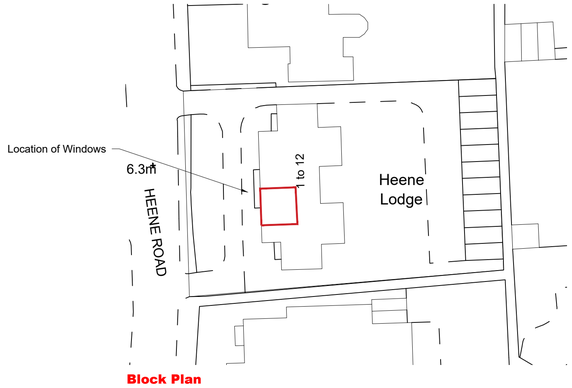

Block Plan
Scale: 1:500

SITE PHOTOS

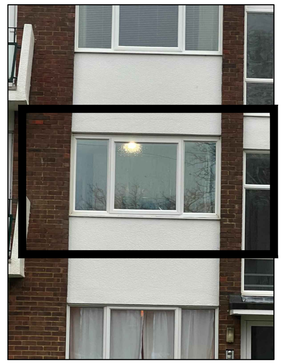

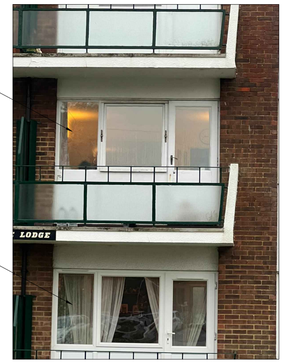

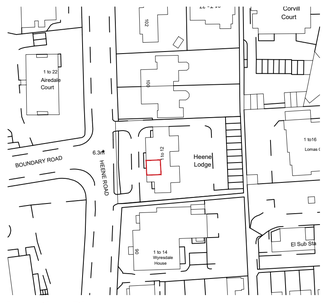

Location Plan
Scale: 1:1250

FOR APPROVAL

NOTE:

This drawing is to be read in conjunction with the Construction Notes and Structural Engineer's details.

The Contractor is responsible for all setting out and must check levels and dimensions on site before ordering materials or commencing work.

Refer to written dimensions only. Do not scale from drawings, except for the purposes of Planning assessment.

The Architect is to be immediately notified of any omissions or discrepancies.

Building work should not commence until all statutory approvals have been granted, i.e. Planning, Building Control, etc.

If a public sewer is discovered, consent to 'Build-over/Close-to' may be required from the Water Authority.

PARTY WALLS:

Work to Party Walls (including insertion of flashings, beam bearings, etc) are subject to Party Wall agreements with neighbours and are to be arranged by the Client in accordance with the Party Wall Act (i.e. Providing two months written notice)

Below ground drainage - Surface Water
Below ground drainage - Foul Water
Discharge pipes
Existing structure
Proposed structure
Removed structure
Section line

Revision	Date:	Details:	Initials:
A	00/01/2023	Client Amendments	DLS

These drawings and designs are the property of Shear Architectural Design Ltd and must not be copied, retained, or used without prior written consent. © Copyright

SHEAR ARCHITECTURAL
CREATE INSPIRE ENHANCE

Echo 3 Office, Maritime House,
Basin Road N,
Portslade, Brighton,
BN41 1WR

07881 656512
info@sheararchitecturaldesign.co.uk
www.sheararchitecturaldesign.co.uk

PROJECT:
Flat 9, Heene Lodge,
Heene Road, Worthing,
BN11 3RF

DRAWING TITLE:
Timber Windows and Door updated to UPVC

NORTH

DATE:	08/01/2024
SCALE:	Various @ A1
DRAWN:	ML
CHECKED:	-
SHEET	1 OF 1

PROJECT NUMBER:	DRAWING NUMBER:	REVISION:
23/67	PL1	A

METERS @ 1:50 | METERS @ 1:100 | METERS @ 1:200 | METERS @ 1:500 | METERS @ 1:1250