

01 **Existing First Floor Layout Plan**
Scale: 1:100



02 **Site Block Plan**
Scale: 1:500



03 **Site Location Plan**
Scale: 1:1250

Notes:

1. All measurements are in millimetres unless otherwise stated
2. No alterations will be made to the first floor under this application.
3. Non-loadbearing wall removal will be carried out as per the accompanying Structural Engineers information

Reproduced by permission of Ordnance Survey on behalf of HMSO. ©Crown Copyright and database right (2024).

B	Opening width reduced to leave 400mm wall each side	ND	Feb 2025
A	Proposed wall removal elevation added	ND	Feb 2025
	Description	By	Date

AMENDMENTS

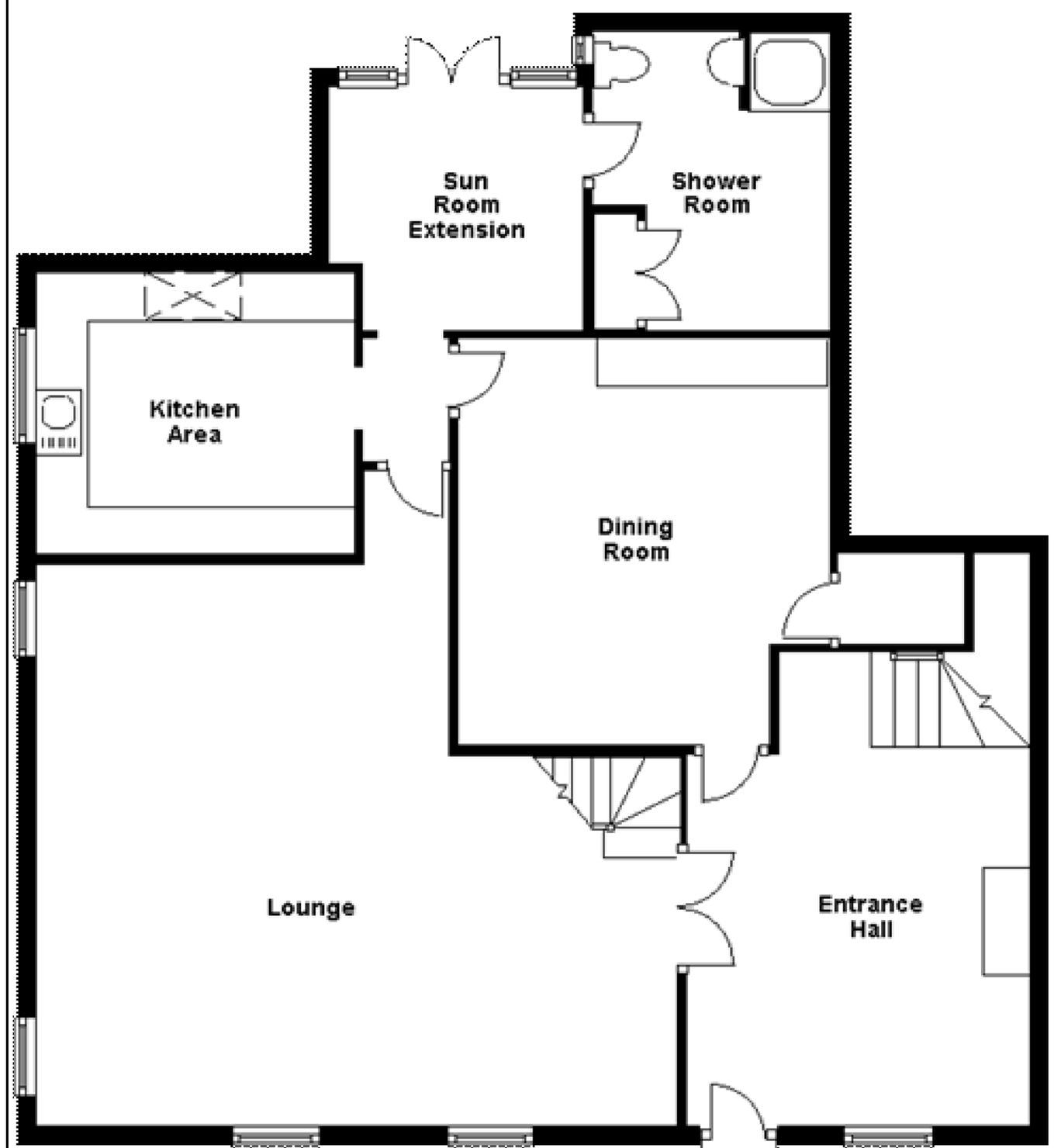

04 **Existing Ground Floor Layout Plan**
Scale: 1:50

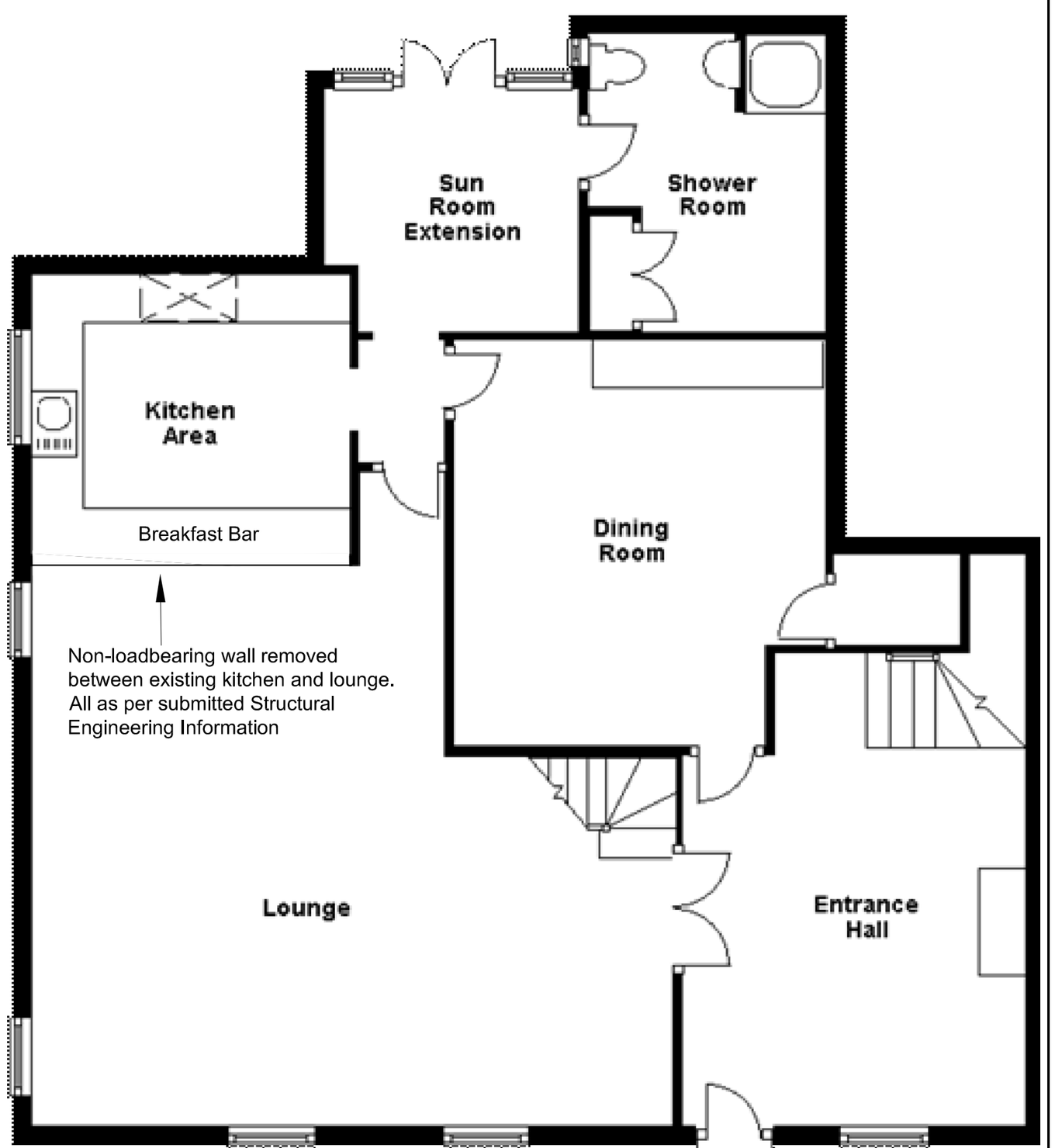

05 **Proposed Ground Floor Layout Plan**
Scale: 1:50

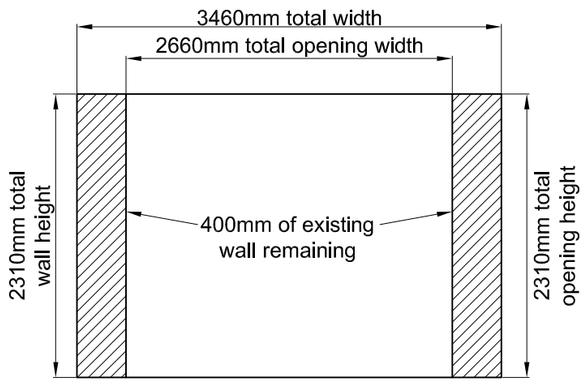

06 **Proposed removed wall Elevation**
Scale: 1:50

Address;
11-13 High Street Tarring, Worthing, BN14 7NN

Description;
Listed Building Consent Application for the removal of an existing ground floor Non-loadbearing wall, including the necessary structural provisions

Scale: As Shown@A2	Date: Nov 2024
Drawn by: ND	Checked by: ND
Drawing No: 2024/HST/01	B