© Michael Cook Associates (Architects) Limited. No dimensions to be scaled from drawing. The contractor should check all dimensions on site. If in the contractors reasonable opinion any discrepancy is found between the drawings and the site conditions, he should inform the Architect immediately.

MICHAEL COOK ASSOCIATES
Worthing
Tel: 01903 245555
Fax: 01903 245666
E-Mail: office@michaelcookassociates.co.uk

Project: Proposed Changing Rooms
Worthing

Drawing Title: Porch Details

Drawn: MA Checked: ACC Date: 30.01.17

Drawing No: A(ST)020 Revision: P1

Status: TENDER

Scale: SCALE VARIES

Site Address: 13-35 St Dunstans Road, Worthing

Client: M.D Chipping

PORCH ELEVATION 01

SCALE 1:50

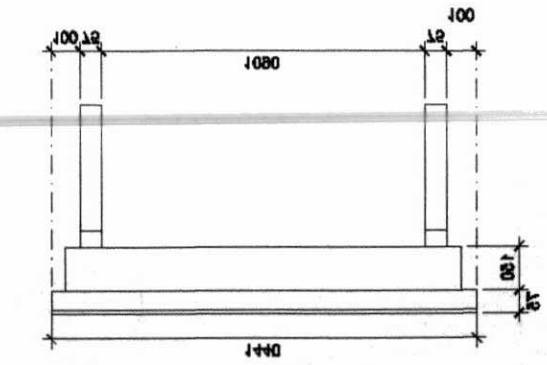

PORCH ELEVATION 02

SCALE 1:50

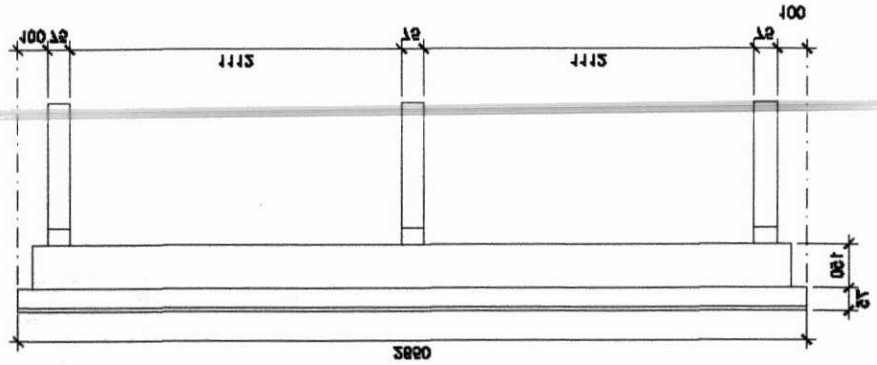

PORCH SECTION

SCALE 1:10

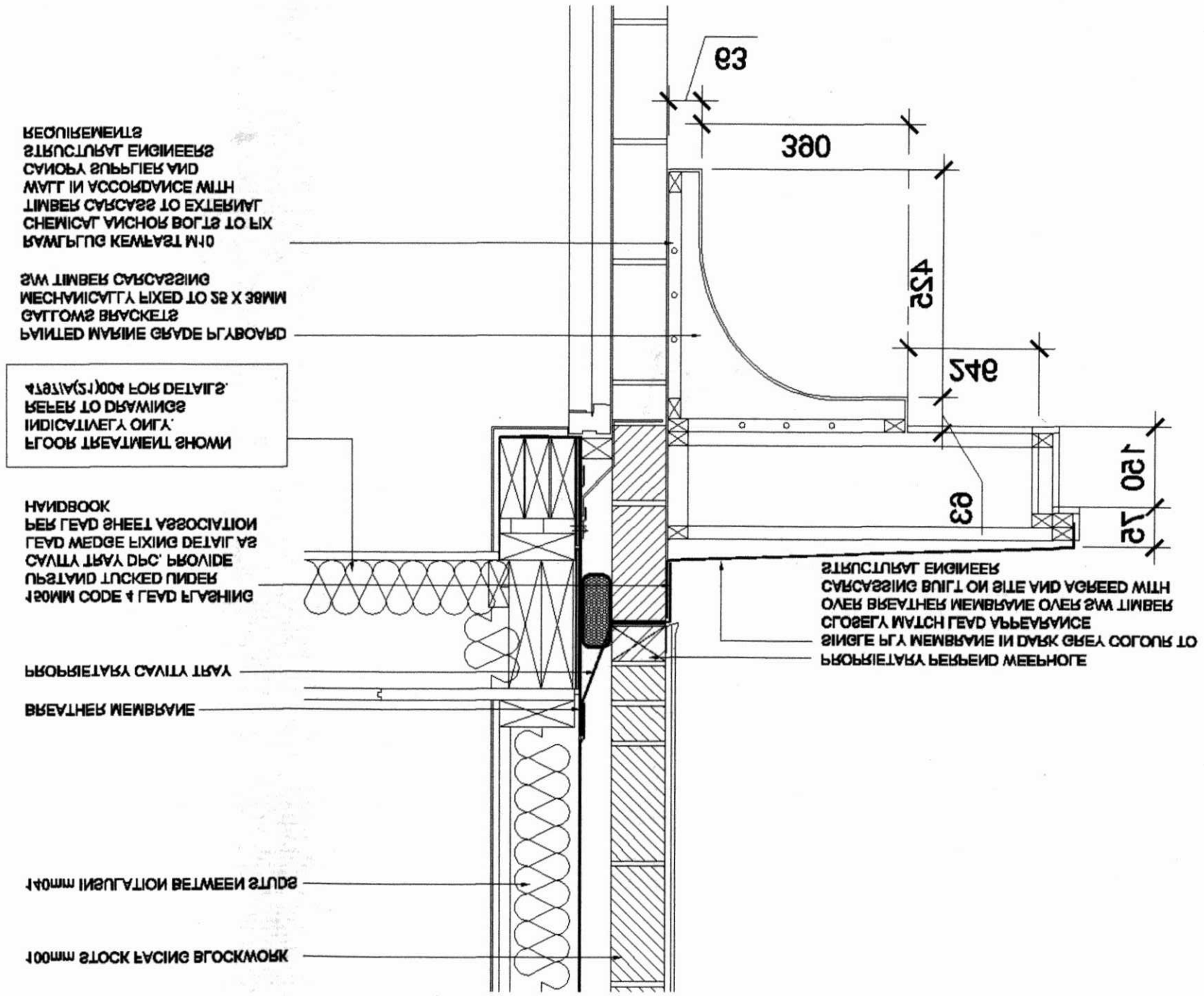

PORCH DETAIL 02 (WEATHERBOARDING)

SCALE 1:10

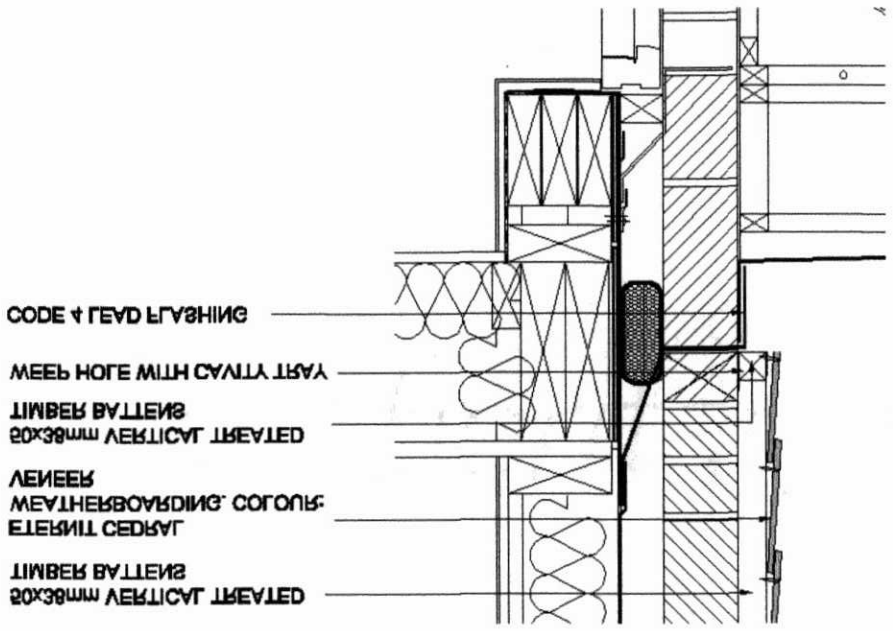

PORCH DETAIL 01(RENDER)

SCALE 1:10

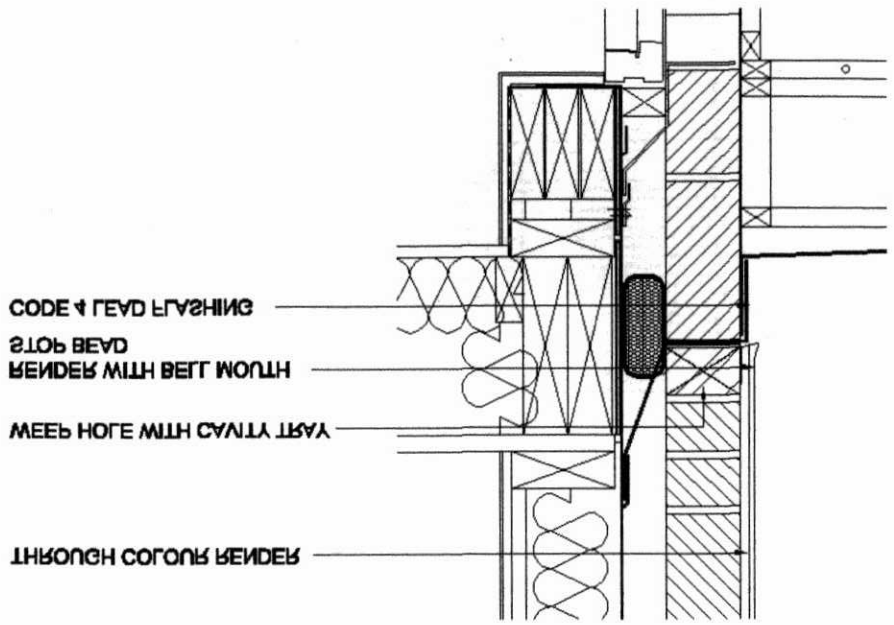

Cond 52

CDM 2007: Health & Safety Information: