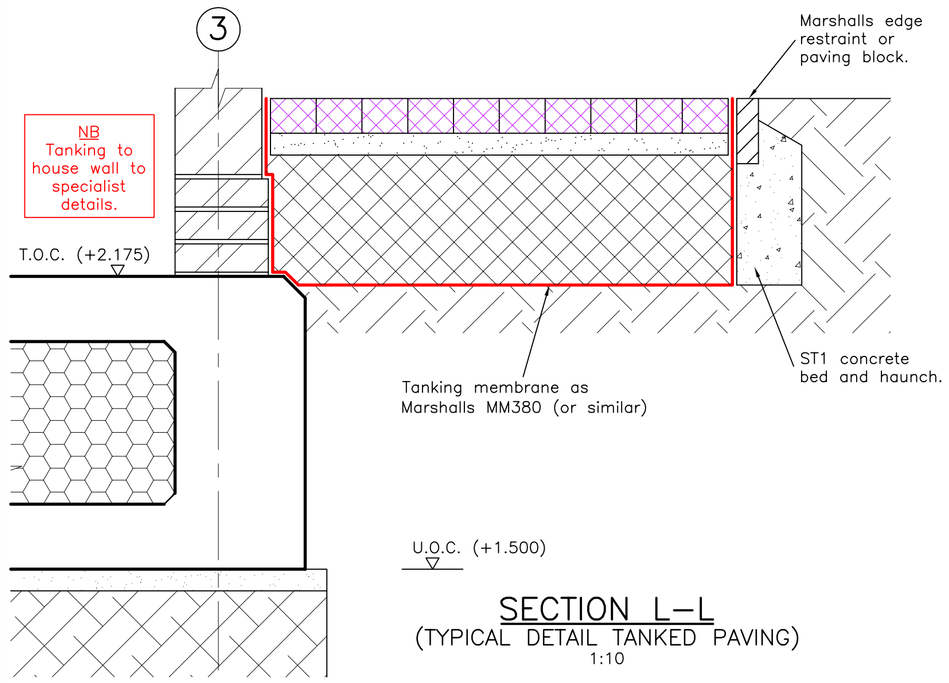

SECTION L–L
(TYPICAL DETAIL TANKED PAVING)
1:10

Non–Bypass Chamber
For sites where discharge rates must be guaranteed to not exceed a prescribed limit(s).

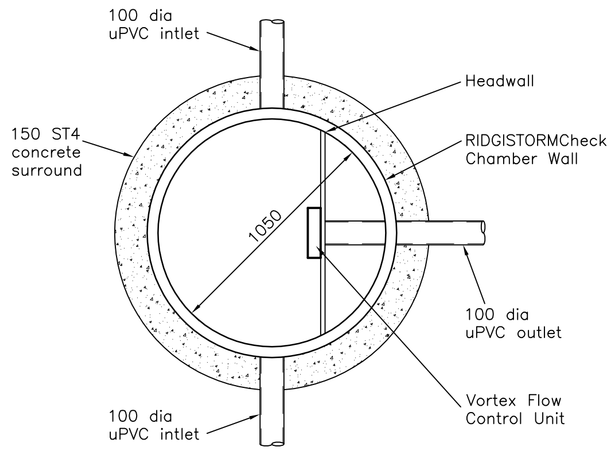

PLAN
1:20

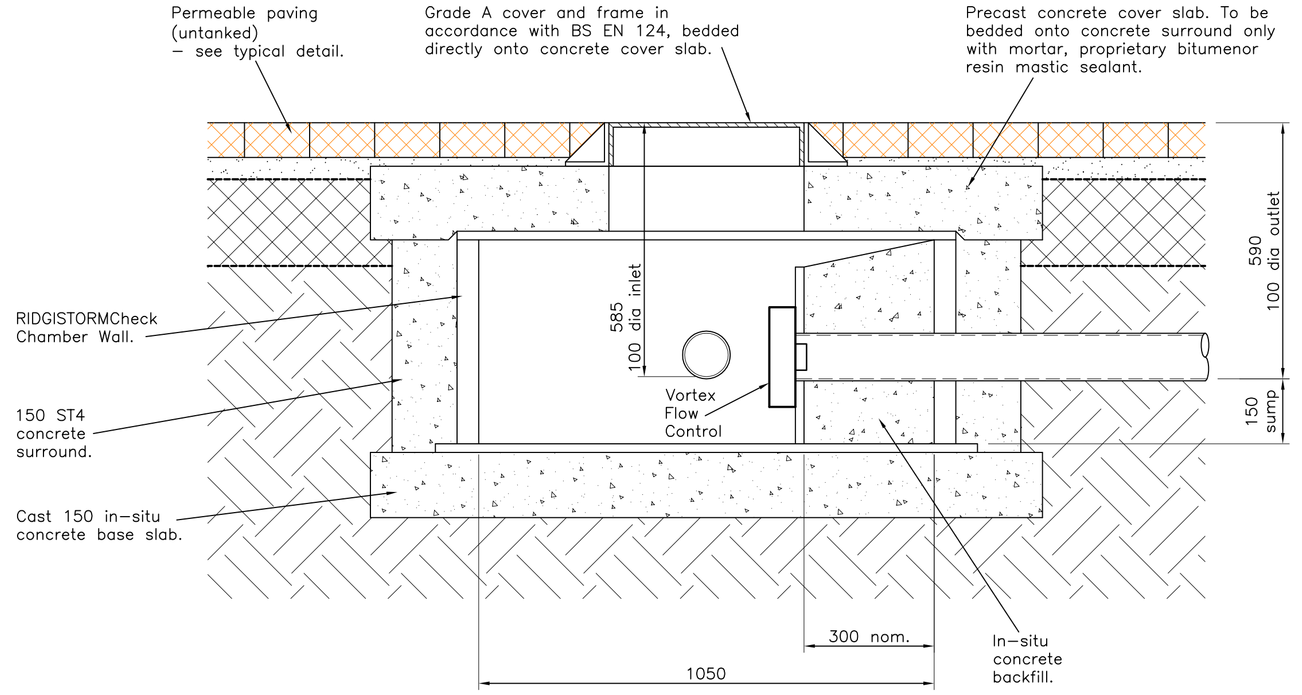

SECTION
1:10

NOTES

1. This drawing has been prepared using a Topographical Survey Drawing supplied by the client in AutoCAD format.

2. This drawing is to be read in conjunction with all relevant Engineers' and Architects' drawings and specifications.

3. All dimensions are in millimetres unless noted otherwise. All levels are in metres.

4. This drawing has been prepared from drawings supplied by others, therefore, the contractor must take accurate dimensions on site and be satisfied by all dimensions prior to setting out.

5. In accordance with The Construction (Design and Management) Regulations 2015 (CDM 2015) the Principle Designer and Contractor are to:
–Notify HSE of works.
–Comply with the requirements of Health and Safety Plan (if applicable)
–Provide risk assessments and method statements for all potential hazards relevant to this project.

6. For additionl notes see Drawing 414328/202.

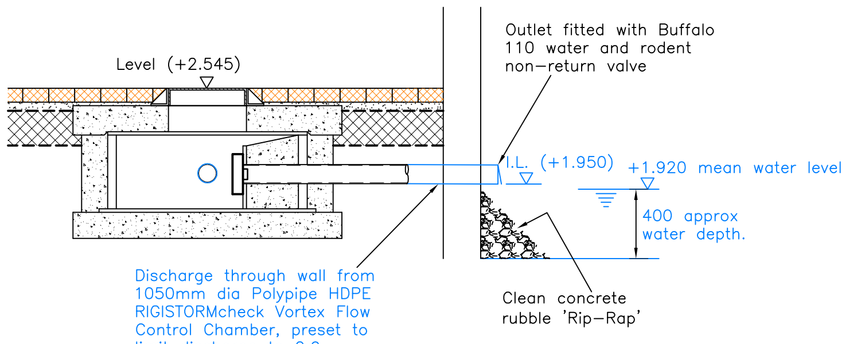

DETAIL AT DISCHARGE TO LAGOON
1:25

Polypipe HDPE RIGISTORMcheck Vortex Flow Control Chamber Installation Details

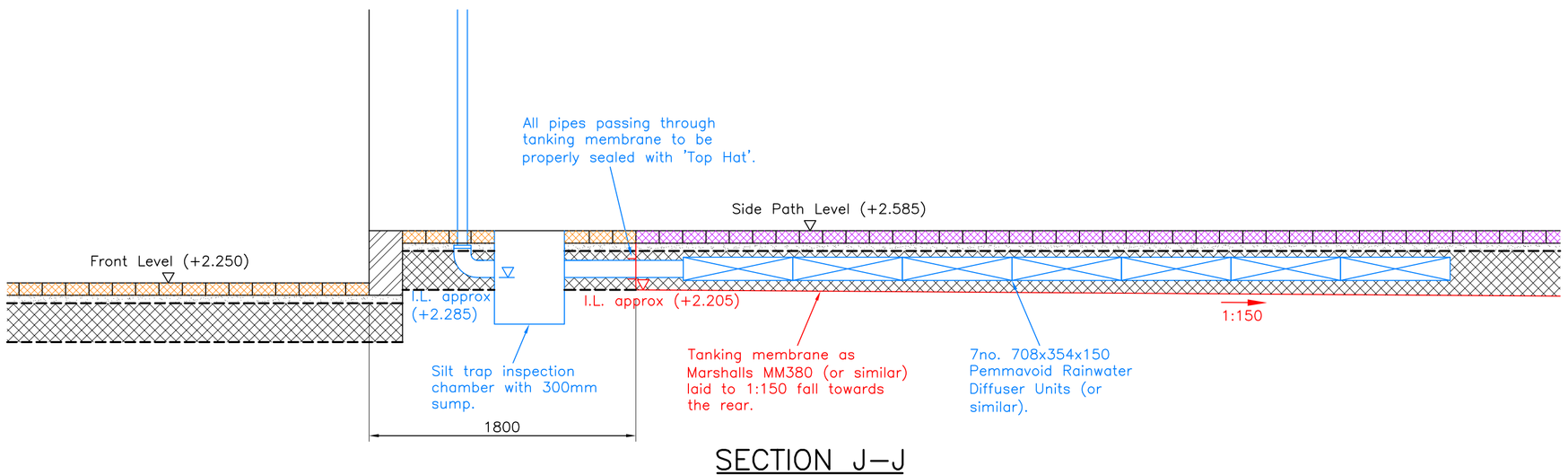

SECTION J–J
1:25

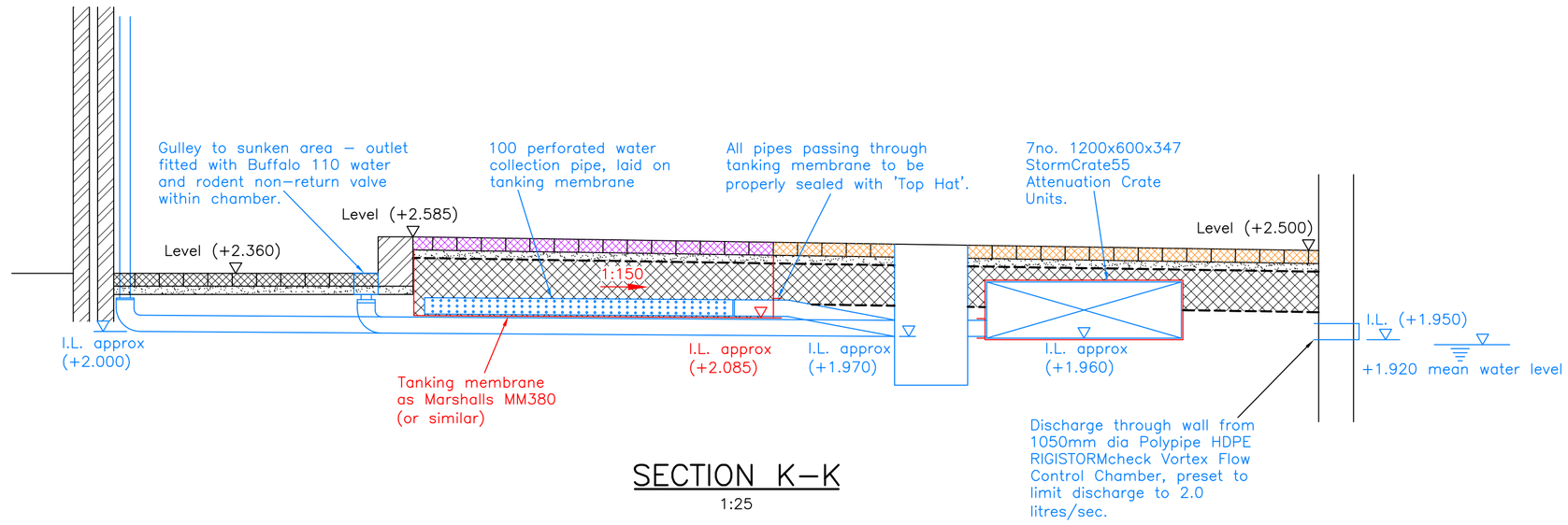

SECTION K–K
1:25

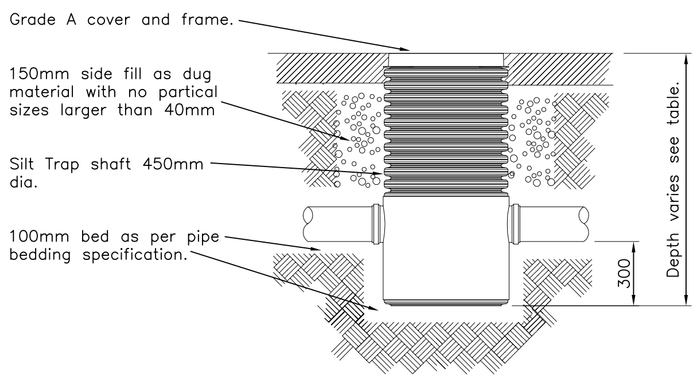

TYPICAL DETAIL FOR SILT TRAP NON–LOAD BEARING AREAS
1:20

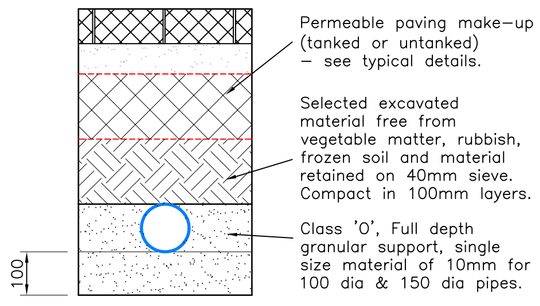

BEDDING FOR FLEXIBLE PIPES NOT UNDER PARKING
1:10

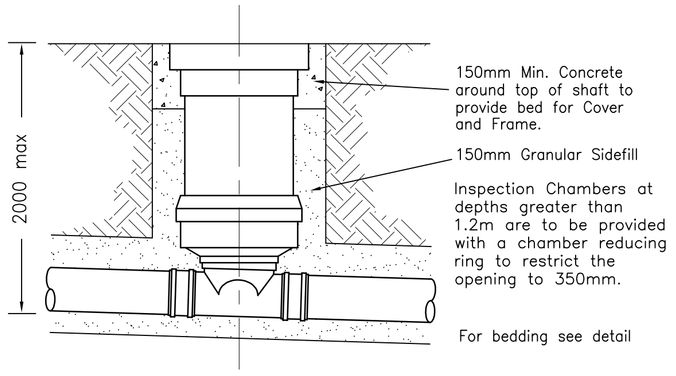

450mm dia INSPECTION CHAMBER NON–LOAD BEARING INSTALLATION
1:10

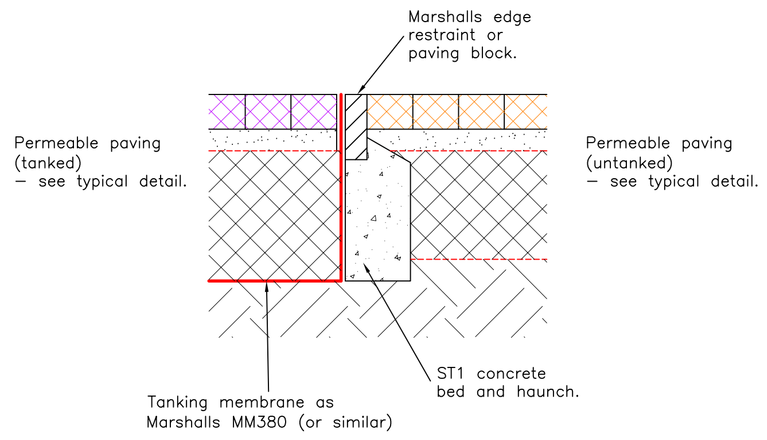

DETAIL AT JUNCTION OF TANKED & UNTANKED PAVING
1:10

DO NOT SCALE THIS DRAWING

Date	By	Revision	QA'D	Chk'd	Ref
26.03.21	CMW	Elevation removed and Details added.			B
29.01.21	CMW	Elevation and Details revised.			A
27.11.20	CMW	CONSTRUCTION ISSUE			

Status: **CONSTRUCTION**

Cowan Consultancy
STRUCTURAL, CIVIL AND BUILDING CONSULTANTS
3 Turnberry House
4400 Parkway
Whiteley
Fareham
Hampshire
PO15 7FJ
Also at:
Landguard Manor
Landguard Manor Road
Shanklin
Isle of Wight
PO37 7JB
Tel: 01489 577488
Fax: 01489 579873
consultants@cowanconsult.co.uk
www.cowanconsult.co.uk

Client: MR KEVIN MORGAN

Project: NEW DEVELOPMENT, 158 BRIGHTON ROAD, LANCING, WEST SUSSEX, BN15 8LL

Title: STORM DRAINAGE GENERAL ARRANGEMENT 2 of 2

Date	Scale	Drg. No.
OCT 2020	AS SHOWN @ A1	414328/203B
Drawn: CMW	Chk'd: DJB	QA'D: DJB