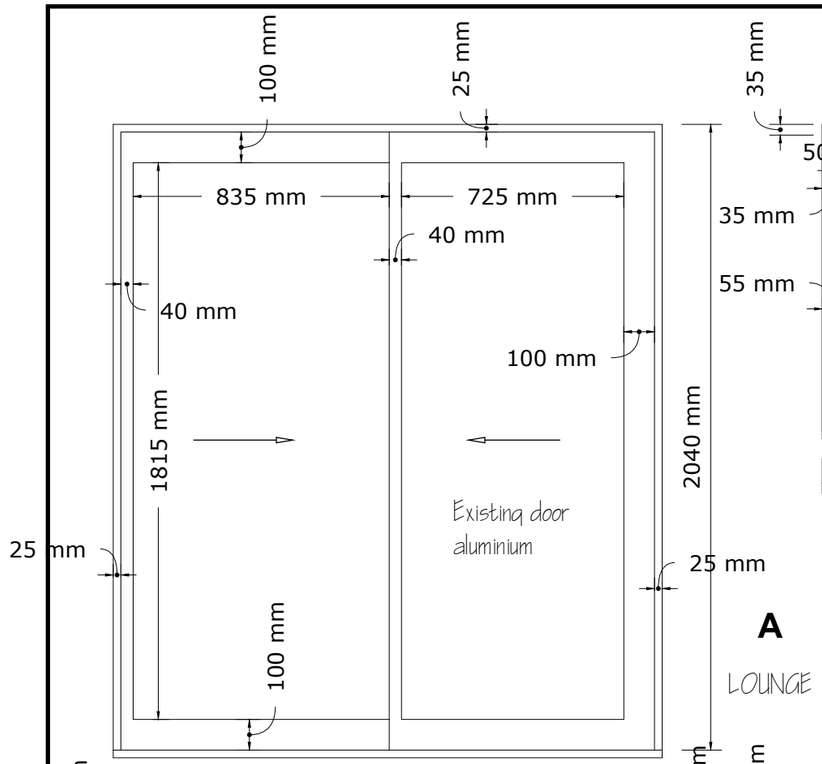

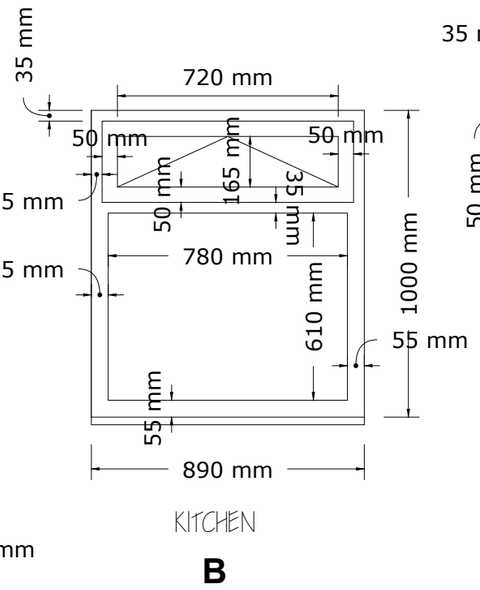

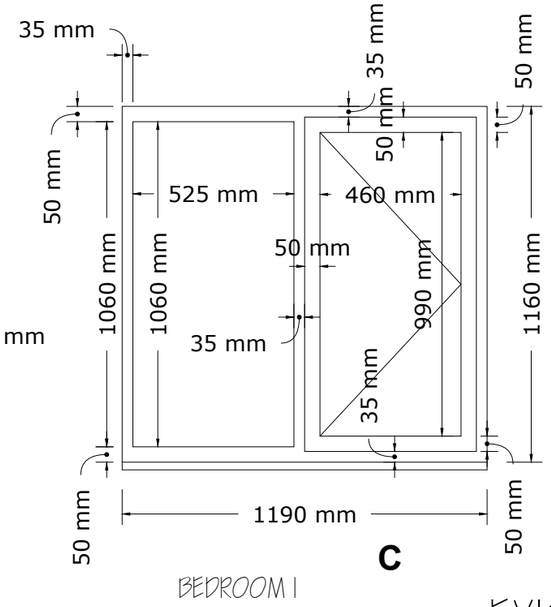

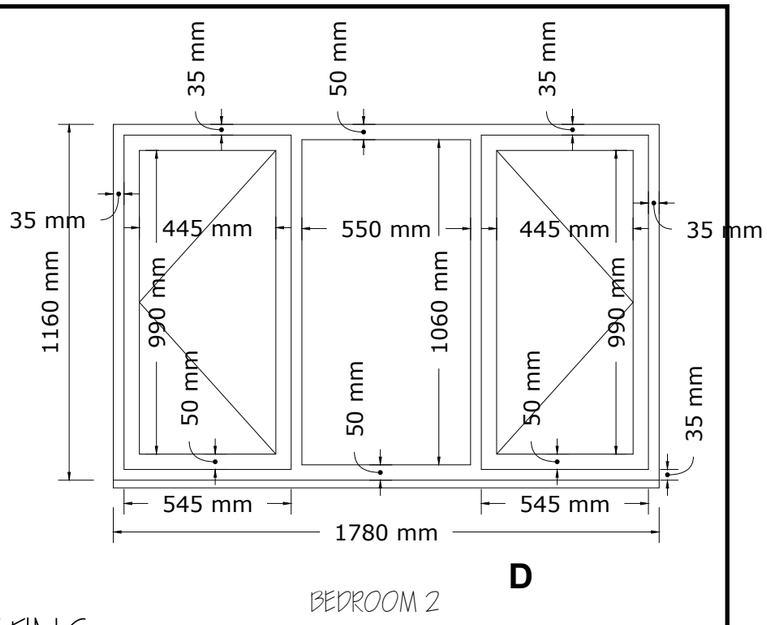

EXISTING

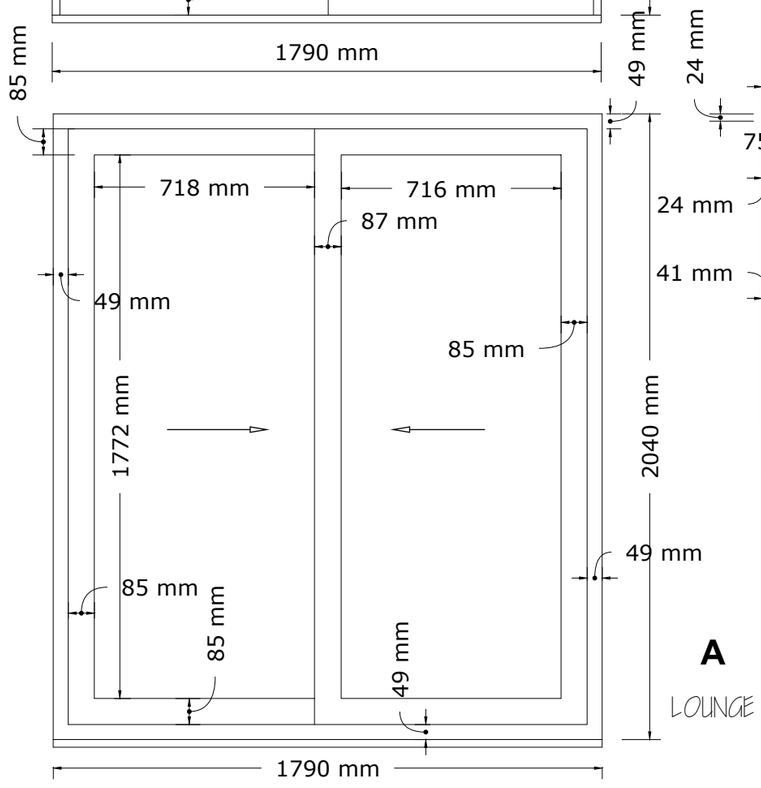

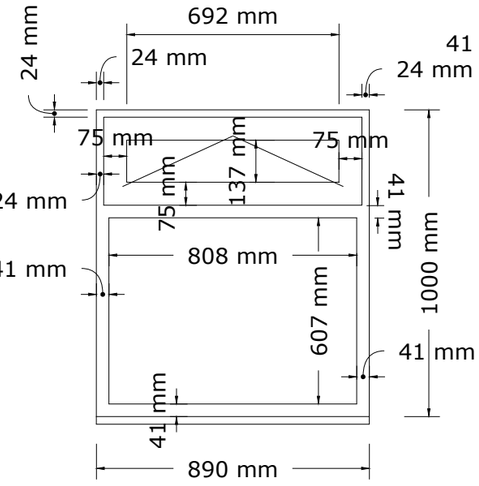

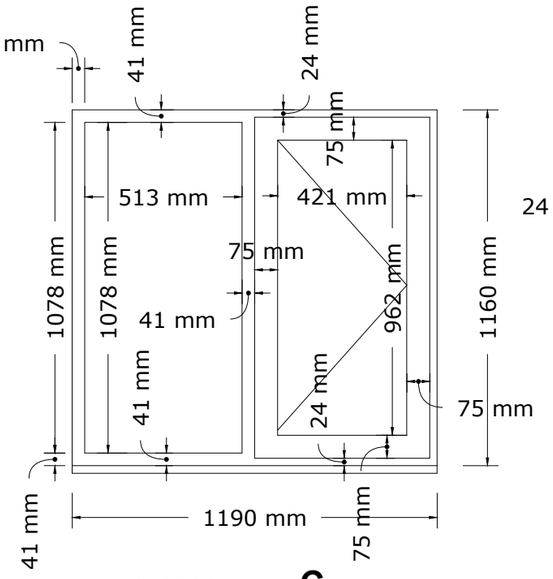

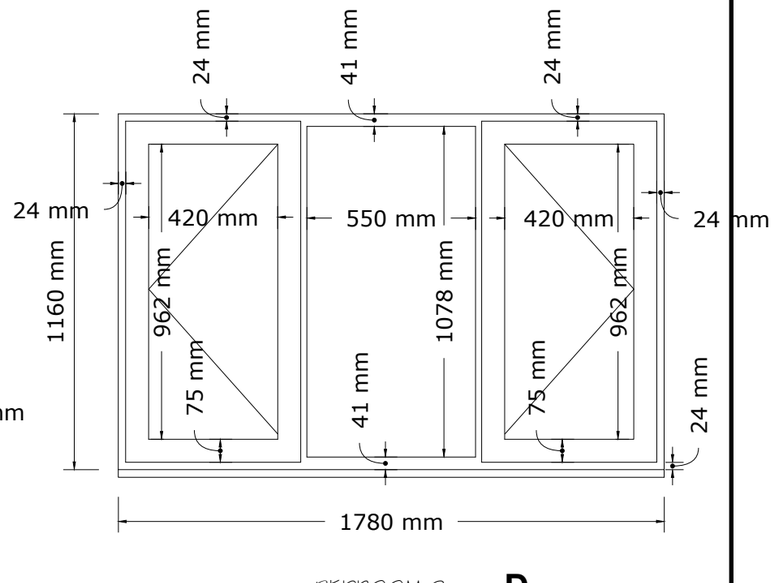

PROPOSED

REHAU TOTAL 70 CASEMENT WINDOWS
LOUNGE - REHAU AGILA SLIDING DOOR
WHITE UPVC

PRINT AT A3

deadspace DESIGNS

REPLACEMENT WINDOW APPLICATION:
Flat 2, Shakespeare House, 3 Shakespeare Road, Worthing, West Sussex, BN11 4AN

DRWG No: DS/ GALLAGHER/ 01 TITLE: Window details - EXISTING AND PROPOSED DATE: 25/ 04/ 2025

0 500 1000

scale bar 1:20 @ A3