DO NOT SCALE FROM THIS DRAWING

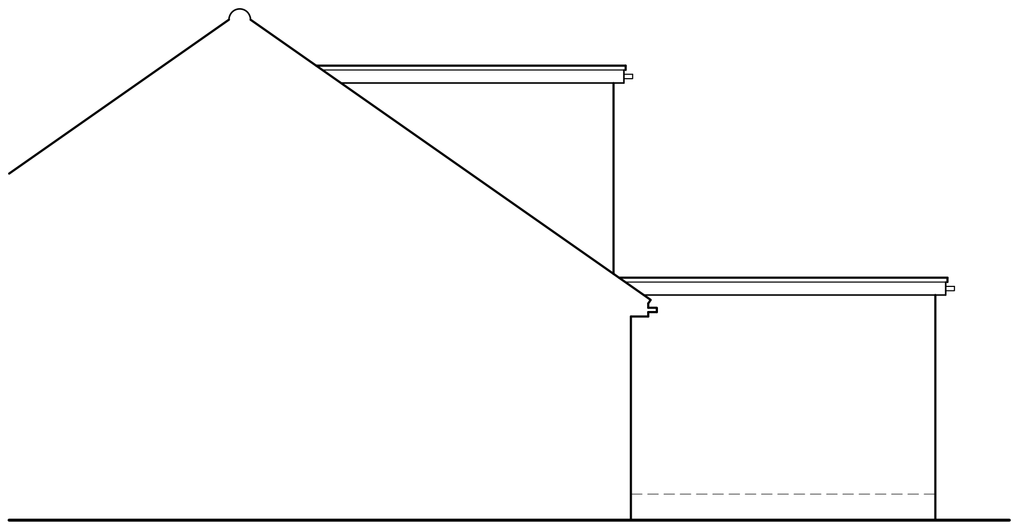

North Elevation

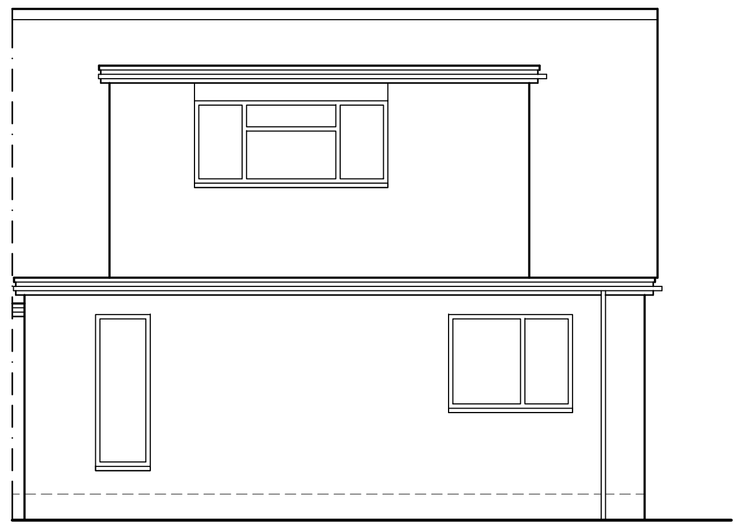

West Elevation

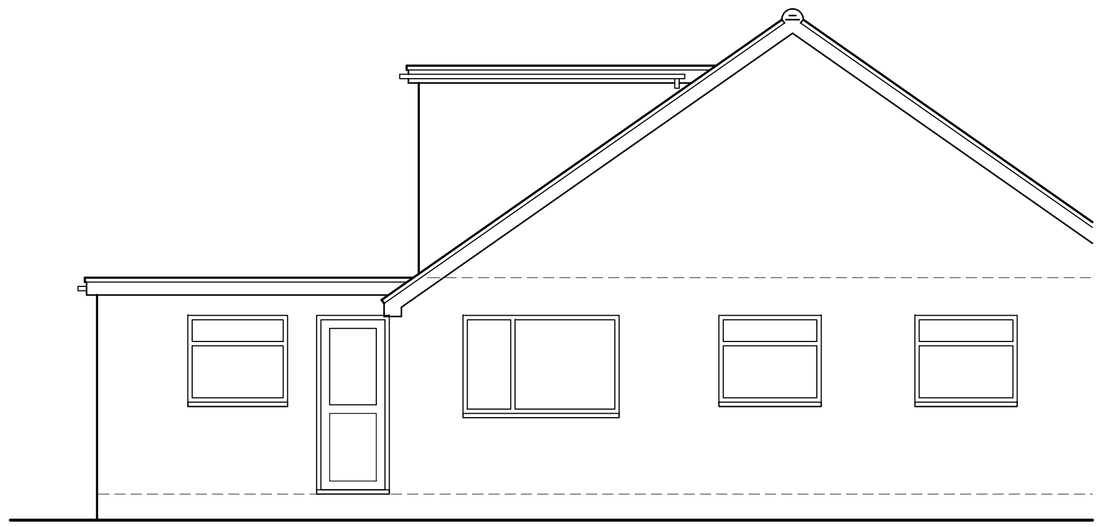

South Elevation

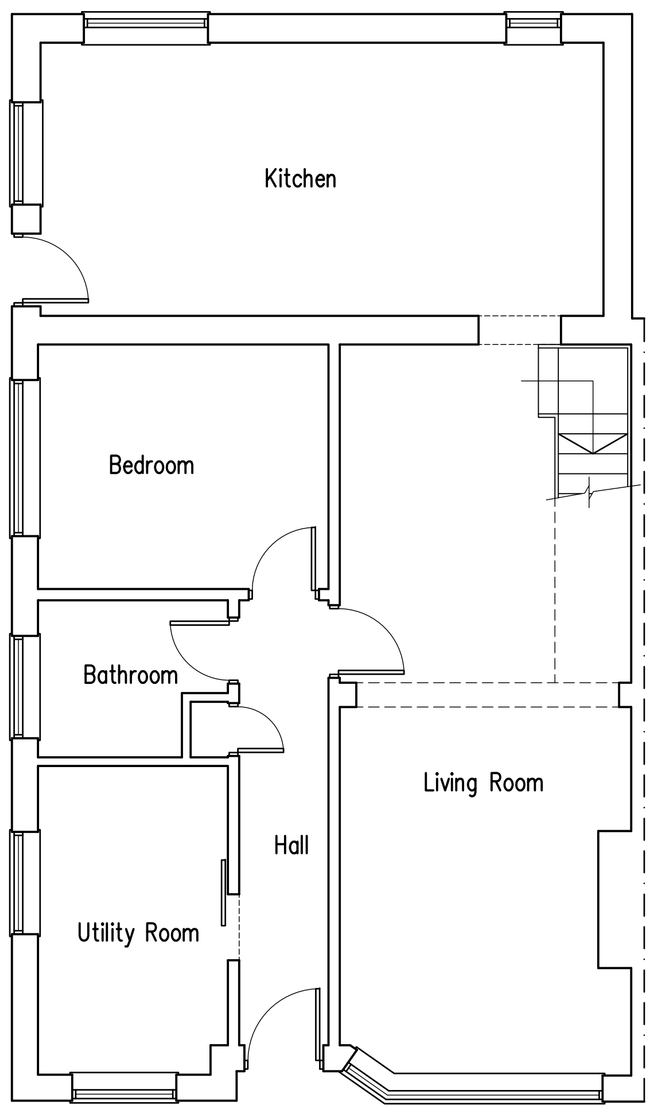

Ground Floor Plan









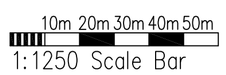

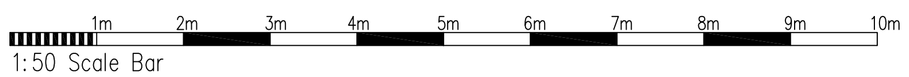

Proposed Conservatory At: 23 Bramber Close, Sompting, Lancing, West Sussex BN15 0JA

A	19.02.19 — Updated to suit planner's comments

rja Planning & Building Consultants Ltd.
1st Floor
10 High Street
Shoreham-By-Sea
West Sussex BN43 5DA
t: 01273 467297 mob: 07971 375739
e: rex@rjapbc.co.uk web: www.rjapbc.co.uk

Chartered Institute of Architectural Technologists

PROJECT: 23 Bramber Close, Sompting, Lancing, West Sussex

DRAWING TITLE: Existing Floor Plans & Elevations

CLIENT: Mr & Mrs Wilson

DWG NO: 19721–01

REVISION: A

SCALE: 1:50 @ A1

DATE: 14.1.2019

DRAWN: rex